EXECUTIVE SUMMARY

The term "Master Plan" is a guideline for future development. This guideline is being resulted on specific issues. The Government of Bangladesh has committed to prepare the Paurashava master Plan for ensuring the Paurashava environment livable. At present, development scenery of the Paurashava shows a very grave situation. Primary and secondary drains and natural streams are not functioning as an integrated drainage system due partly to silting up and unplanned and deficient construction and lack of maintenance. Encroachment on drainage reservations causes inundation to many areas, including houses and roads, during heavy storms. There is hardly any roadside drain and if any, the roadside drains are inadequate due to insufficient capacities and incorrect gradients.

Equally, traffic and transportation problems in the Paurashavas in Bangladesh are continuously increasing as the development and management of road network has not been commensurate with the increasing demand for its usage. Traffic congestion, delay, accidents, pedestrian and parking difficulties, air and noise pollution are among the problems. Traffic congestion is one of the most important and critical problems now being identified in the Paurashavas. The situation has been steadily deteriorating over time, over large areas and for longer periods of the day. If this unplanned construction goes on unabated it will make the environment of the Paurashava unsuitable and inhabitable. At present, there is no proper Master Plan for development of Paurashava to overcome those problems. In the absence of proper Master Plan construction of all types of infrastructure like houses, roads, drains, markets are going on unabated in an unplanned manner. This situation is creating an adverse milieu in the original landscape thereby creating environmental hazards.

It appears that planned development of Paurashava is very important. In view of this grave situation it has, therefore, been contemplated that preparation of Master Plan is being made with projection for a period of 20 years. Further, in support of the Master Plan there are three tier development plan named Structure Plan, Urban Area planand and Ward Action Plan. Structure Plan is a long term policy level plan, Urban Area plan is a medium term plan for urban developmentwhich includes Landuse Plan, Drainage and Environmental Plan, Traffic Management Plan and Ward Action Plan is short term action plan to ensure operation and maintenance of the existing infrastructure along with those facilities proposed to be built up under the future investment program. Master plan suggess improvement of the management ability of the Paurashava Authority so that their revenue earning capability will be enhanced with a view to building up the Paurashava Authority as self-sustaining local government institution. The Master Plan will also suggest construction of roads and bridges / culverts, drainage facilities, streetlights, markets, bus stands, solid waste management, sanitation, water supply and other such infrastructure facilities.

This is the primary effort of planned development for the Kaliakair Paurashava, guided by the LGED under Package–01 of the Upazila Towns Infrastructure Development Project (UTIDP). It is expected that the implementation of the plan will induce higher level of development, ensure planned life, good community and better future of the Paurashava inhabitants.

Kaliakair Paurashava, the study area, is located in Kaliakair Upazila about 15 km from District Headquarter, Gazipur. It is located in the southern-western part of Gazipur zila and central region of Bangladesh. Kaliakair Paurashava lies on 24º 05' North latitude and 90º 10' East longitude. It is about 70 km road distance from the capital city Dhaka. It is bounded by Chapair union and Mirzapur on the north, Dhaljora and Atabaha union and Savar Upazila on the south, Gazipur Sadar Upazila on the east, Mirzapur Upazila on the west. The Consultant has identified the Paurashava's existing jurisdiction area as 27.28 sq. km. Kaliakair Paurashava has high prospects of industrial development. The condition of road network and utility facilities and services are poor

with insufficient and irregular drainage network, no piped water facility. Very few numbers of dustbin etc. solid waste disposal and management situations is very poor in this Paurashava area.

Almost all the Wards have no sewerage system and toilets are mostly consists of sock pits. Overall garbage disposal system is poor. Garbage Dumping Ground is not available and mostly disposes on open streets. Wastes collect by the NGOs but not well organized all over the planning area.

The Upazila Towns Infrastructure Development Project (UTIDP) of LGED requires that one of its outputs is a comprehensive set of plans for Kaliakair Paurashava. The proposed set of plans consists of Structure Plan, Urban Area Plan and Ward Action Plan.

The Structure Plan sets out a long-term strategy – covering the twenty years from 2011 to 2031 for urban development and the use of land in the Paurashava Town as a whole. It extends to the entire area demarcated by the Consultant. The document sets out a series of policies to be pursued, if the broad objectives set for development of the Paurashava to be achieved.

The Urban Area Plan elaborates policies of the Structure Plan as far as they affect the area where urban development activity will be concentrated. The plan, therefore, is limited to the existing urban area and its immediate surroundings. It is for a period of ten years, covering the period from 2011 to 2021. In providing more detailed guidance available in the Structure Plan, it gives greater precision to the spatial dimension of the Structure Plan policies. The Urban Area Plan includes landuse Plan, Traffic and Transportation Plan, Drainage and Environmental Management Plan and Plan for Urban Services.

The pourashava is mainly industrial dominant around 11.46% land are under industrial use, 25.36 % agricultural, 24.25% residential, and 19.54% forest area. Considering the development pattern and effective development control 31.15% land has proposed as residential, 11.22% industrial, 1.94% commercial use.

Within the Paurashava area is 199.89 km out of which 83.49 km is Pucca road, 91.83 km is brick soling Semipucca road, 24.57 km is Katcha road. Total, 128.02 km roads have been proposed for improvement for efficient accessibility of the Paurashava of which some are fully new road.

There are 50 ponds, 256 ditches, seven canals and one river covering 552.16 acres area of Kaliakair Paurashava. Canals, Ponds and ditches have been found to be connected with existing drains. Water bodies accounts for 552.16 acres of land. Existing total Pucca and Katcha drains covers 11.5 km length. For the removal of existing drainage congestion and provisioning of effective drainage system, a planned drainage network has been proposed. About 118.83 km drain is being added as a proposal of which 17.90 Km are primary drain and 60.31 Km is secondary drain and 40.62 km is tertiary drain.

The Ward Action Plan provides guidance for areas where major change or action is expected in the short-term (5 years). According to the individual Ward of the Paurashava, this plan provide further the policies and proposals of both the Structure Plan and Urban Area Plan in more detailed and guidance for the control, promotion and coordination of development. Ward level facilities like ward center have porosed under this category.

MASTER PLAN REPORT FOR KALIAKAIR PAURASHAVA
TABLE OF CONTENTS

Executive Summary *I-II*
Table of Contents of Master Plan Report *III-VII*
List of Table, Figures & Maps *VIII-IX*
Annexure and appendix *XI*
List of Abbreviations and Acronyms *XII*

TABLE OF CONTENTS

Part-A: Structure Plan

CHAPTER-01 : INTRODUCTION 1

1.1 Introduction 1
1.2 Philosophy of the Preparation of Master Plan 2
1.3 Objectives of the Master Plan 2
1.4 Approach and Methodology 3
1.5 Scope of Work 7
1.6 Organization of the Master Plan Report 9

CHAPTER-02 : INTRODUCTION TO STRUCTURE PLAN 11

2.1 Background of the Paurashava 11
2.2 Vision of the Structure Plan 11
2.3 Concepts, Content and Format of the Structure Plan 12
2.4 Duration and Amendment of the Structure Plan 15
2.5 Structure Plan Area 15

CHAPTER-03 : PAURASHAVA'S EXISTING TREND OF GROWTH 19

3.1 Social Development 19
3.2 Economic Development 21
3.3 Physical Infrastructure Development 25
3.4 Environmental Growth 26
3.5 Population 26
3.6 Institutional Capacity 31
3.7 Urban Growth Area 33
3.8 Catchment area 34
3.9 Landuse and Urban Services 34
3.10 Paurashava Functional Linkage with the Regional and National network 41

CHAPTER-04 : CRITICAL PLANNING ISSUES 47

4.1 Transport 47
4.2 Environment and Drianage 47
4.3 Physical Infrastructure 48
4.4 Social and Municipal Facilities 49
4.5 Landuse Control 50
4.6 Disaster 51
4.7 Laws and Regulations 51

CHAPTER-05 : PAURASHAVA DEVELOPMENT RELATED POLICIES, LAWS AND REGULATIONS 53

5.1 Indicative Prescription of Policy for Paurashava in the light of the Different Urban Policies, Laws, Regulations and Guidelines 53
5.2 Laws and Regulations Related to - 68
5.2.1 Urban Development Control 68
5.2.2 Paurashava Development Management 72
5.3 Strength and Weaknesses of the Existing Policies 75

CHAPTER-06 : PROJECTION OF FUTURE GROWTH BY 2031 77

6.1 Introduction 77
6.2 Projection of Population 77
6.3 Identification of Future Economic Opportunities 78
6.4 Projection of Landuse 79
6.5 Housing 82

CHAPTER-07 : LAND USE ZONING POLICIES AND DEVELOPMENT STRATEGIES..... 87

7.1 Zone of Structure Plan Area 87
7.1.1 Core Area 87
7.1.2 Fringe Area 87
7.1.3 Peripheral Area 87
7.1.4 New Urban Area 91
7.1.5 Agriculture 92
7.1.6 Forest 92
7.1.7 Waterbody 92
7.1.8 Major Circulation Network 92
7.2 Strategies for optimum use of Urban Land Resources 92
7.2.1 Optimum use of Urban Land Resources 92
7.2.2 Plans for New Area Development 93
7.2.3 Areas for Conservation and Protection 94
7.3 Policies for Development 94
7.3.1 Policies for Socio-economic Sector 95
7.3.2 Physical Infrastructure Sector 98
7.3.3 Environmental Issues: 100

CHAPTER-08 : IMPLEMENTATION ISSUES 101

8.1 Institutional Capacity Building of the Paurashava 101
8.1.1 Staffing and Training 102
8.1.2 Lack of Automation 102
8.1.3 Town Planning Capacity 102
8.1.3.1 Institutional Framework (Proposed by UGIIP, LGED) 102
8.1.3.2 Lack of Paurashava Town Planning Capacity 104
8.1.4 Legal Aspects 105
8.1.5 Good Governance in Legal Provisions 105
8.1.6 Financial Issues 105
8.1.7 Monitoring, Evaluation and Updating 106
8.1.8 Periodic Review and Updating 106
8.2 Resource Mobilization 107
8.3 Concluding Remarks 107

TABLE OF CONTENTS
Part-B: Urban Area Plan

CHAPTER-09 : URBAN AREA PLAN 109

9.1 Goals and Objectives of Urban Area Plan 109
9.2 Methodology and Approach to Planning 109
9.3 Delineation of Planning Areas 110
9.4. Content and Form of Urban Area Plan 110

CHAPTER-10 : LANDUSE PLAN 113

10.1 Methodology and Approach 113
10.2 Existing and Projected Landuse 113
10.2.1 Introduction 113
10.2.2 Analysis and Projection on Existing and Proposed Landuses 114
10.3 Landuse Proposals 125
10.3.1 Introduction 125
10.3.2 Designation of Future Landuse 126
10.3.3 Landuse Zoning 127
10.3.4 Summary Showing Distribution of Land for Existing and Proposed Landuse 128
10.4 Plan Implementation Strategy 138
10.4.1 Land Development Regulations to Implement the Landuse Plan 138
10.4.2 Implementation, Monitoring and Evaluation of the Landuse Plan 140

CHAPTER-11 : TRANSPORTATION AND TRAFFIC MANAGEMENT PLAN 145

11.1 Introduction 145
11.2 Approach and Methodology 145
11.3 Existing Conditions of Transportation Facilities 146
11.3.1 Roadway Characteristics and Functional Classification 146
11.3.2 Mode of Transport 147
1.3.3 Intensity of Traffic Volume 147
11.4 Analysis of Existing Deficiencies 149
11.4.1 Roadway Capacity Deficiencies 149
11.4.2 Operational, Safety, Signal and other Deficiencies 150
11.5 Condition of other mode of transport (Rail/Water) 150
11.6 Future Projections 151
11.6.1 Travel Demand Forecasting for Next 20 Years 151
11.6.2 Transportation Network Considered 152
11.6.3 Future Traffic Volume and Level of Service 152
11.7 Transportation Development Plan 152
11.7.1 Plan for Road Network Development 152
11.7.2 Road Network Plan 153
11.7.3 Proposal for Improvement of the Existing Road Networks 157
11.8 List of Proposed New Roads 159
11.9 Plan for Transportation Facilities 163
11.9.1 Transportation Facilities Plan 163
11.9.3 Development of Facilities for Pedestrian, Bicycle and Rickshaw 164
11.10 Waterway Development / Improvement Options 164
11.11 Proposal for Improvement of the Existing Waterway 164
11.12 Proposal for New Waterway Development 164
11.13 Railway Development Options 165
11.14 Transportation System Management Strategy (TSMS) 165
11.14.1 Strategies for Facility Operations 165

11.14.2 Strategies for Traffic Flow and Safety 165
11.14.3 Strategies for Traffic Management 169
11.15 Plan Implementation Strategies 169
11.15.1 Regulations to Implement the Transportation Plan 169
11.15.2 Implementation, Monitoring, Evaluation and Coordination of the Plan 171

CHAPTER-12 : DRAINAGE AND ENVIRONMENTAL MANAGEMENT PLAN 175

12.1 Introduction 175
12.1.1 Goals and Objectives 175
12.1.2 Methodology and Approach to Planning 176
12.2 Existing Drainage Network 184
12.2.1 Introduction 184
12.2.2 Existing Drainage System / Network 184
12.2.3 Analysis on Land Level Topographic Contour 186
12.2.4 Analysis of Peak Hour Run off Discharge and Identification of Drainage Outfalls 191
12.3 Plan for Drainage Management and Flood Control 192
12.3.1 Plan for Drain Network Development 192
12.3.1.1 Drain Network Plan 192
12.3.1.2 Proposal for Improvement of the Existing Drain Networks 193
12.3.1.3 List of Proposed New Drains 197
12.3.1.4 List of Infrastructure Measures for Drainage and Flood Control Network 197
12.4 Plan Implementation Strategies 198
12..4.1 Regulations to Implement the Drainage and Flood Plan 198
12.4.2 Implementation, Monitoring, Evaluation and Coordination of the Plan 199
12.5 Environmental Management Plan 201
12.5.1 Introduction 201
12.5.2 Goals and Objectives 201
12.5.3 Methodology and Approach to Planning 202
12.6 Existing Environmental Condition 202
12.6.1 Introduction 202
12.6.2 Geo-morphology 202
12.6.3 Solid Waste and Garbage disposal 205
12.6.3.1 Household Waste 205
12.6.3.2 Industrial Waste 205
12.6.3.3 Kitchen Market Waste 205
12.6.3.4 Clinical / Hospital Waste 205
12.6.3.5 Waste Management System 205
12.6.3.6 Latrine 206
12.6.3.7 Industry 206
12.6.4 Brick Field 206
12.6.5 Fertilizer and Other Chemical Use 206
12.6.6 Pollutions 207
12.6.7 Natural Calamities and Localized Hazards 208
12.7 Plan for Environmental Management and Pollution Control 209
12.7.1 Proposals for Environmental Issues 209
12.7.1.1 Solid Waste Management Plan 209
12.7.1.2 Open space, Wet-land and Relevant Features Protection Plan 210
12.7.1.3 Pollution Protection Proposals 210
12.7.1.3.1 Industrial 210
12.7.1.3.2 Air / Water / Land / Sound 210
12.7.1.3.3 Other Pollution 211
12.8 Natural Calamities and Regular Hazard Mitigation Proposals 211

12.8.1 Protection Plans Addressing Natural Calamities 211
12.8.2 Protection Plan Addressing Regular Hazards 214
12.8.3 Protection Plan Addressing Encroachment and Other relevant issues 214
12.9 Plan Implementation Strategies 215
12.9.1 Regulations to Implement the Drainage and Flood Plan 215
12.9.2 Implementation, Monitoring, Evaluation and Coordination of the Plan 215

CHAPTER-13 : PLAN FOR URBAN SERVICES 219

13.0 Introduction 219
13.1 Range and Content of the Urban Services 219
13.2 Analysis of Existing Condition and Demand of the Services 219
13.3 Proposals for Addressing Urban Services and Implementation Strategies 221
13.3.3 Regulations to Address the Proposals 226
13.3.4 Implementation, Monitoring and Evaluation of the Urban Services Plan 231

TABLE OF CONTENTS
Part-C: Ward Action Plan

CHAPTER-14 : INTRODUCTION 235

14.1 Background 235
14.1.1 Content and Form of Ward Action Plan 235
14.1.2 Linkage with the Structure and Urban Area Plan 235
14.1.3 Approach and Methodology 236
14.2 Prioritization 237
14.3 Ward-wise Action Plan for Next Five Years 239
14.3.1 Action Plan for Ward No. 1 239
14.3.2 Action Plan for Ward No. 2 247
14.3.3 Action Plan for Ward No. 3 255
14.3.4 Action Plan for Ward No. 4 263
14.3.5 Action Plan for Ward No. 5 271
14.3.6 Action Plan for Ward No. 6 279
14.3.7 Action Plan for Ward No. 7 287
14.3.8 Action Plan for Ward No. 8 295
14.3.9 Action Plan for Ward No. 9 303
14.4 Implementation Guidelines 311
14.5 Concluding Remarks 314

LIST OF TABLES

Part-A: Structure Plan

Table 3.1 : Population growth trend analysis of Kaliakair Upazila 20
Table 3.2 : Mouza-wise land value in the Study Area, 2011..... 21
Table 3.3 : Ward wise population of Kaliakair Paurashava, 2011 27
Table 3.4 : Ward Wise population density and percentage of Kaliakair Paurashava..... 31
Table 3.5 : Allocated manpower for Kaliakair Paurashava..... 31
Table 3.6 : Existing manpower in the general and engineering division 32
Table 3.7 : General Land Use of Kaliakair Paurashava (Area in Acre)..... 35
Table 3.8 : Agencies responsible for sectoral activities..... 45
Table 5.1 : Passenger Car Unit (pcu) Conversion factors for non-urban roads 62
Table 5.2 : Functions in brief prescribed in the Local Government (Paurashava) Act, 2009 72
Table 6.1 : Urban Population of Kaliakair Paurashava..... 77
Table 6.2 : Population Projection of Kaliakair Paurashava (growth rate: 4.02%)..... 78
Table 6.3 : Standard of Landuse and future need 80
Table 6.4 : Ward wise housing demand (in acre) 83
Table 7.1 : Structure Plan Policy Zoning 91
Table 7.2 : Policy for optimum use of urban land resources..... 92
Table 7.3 : Policy for new area development..... 93
Table 7.4 : Area for conservation and protection 94
Table 7.5 : Policy for Population Sector 95
Table 7.6 : Policy for Economic Development and Employment Generation 96
Table 7.7 : Housing and Slum Improvement 97
Table 7.8 : Social Amenities and Community Facilities 98
Table 7.9 : Policy for Transport Sector 98
Table 7.10 : Policy for Utility Services 99
Table 7.11 : Policy for Natural Resources..... 100

LIST OF TABLES

Part-B: Urban Area Plan

Table 10.1 : Existing Landuse of Kaliakair Paurashava 116
Table 10.2 : Existing and proposed landuses including standard..... 124
Table 10.3 : Proposed new areas for planned residential development..... 129
Table 10.4 : Proposed facilities for commercial development..... 130
Table 10.5 : Proposed Government office area development 131
Table 10.6 : Proposed new facilities for educational development 131
Table 10.7 : Proposed new facilities for open space development..... 133
Table 10.8 : Proposed new transportation facilities 134
Table 10.9 : Proposed new utility services. 135
Table 10.10 : Proposed area for health facilities development 135
Table 10.11 : Proposed new community facilities..... 136
Table 10.12 : Proposed area for Recreational Facilities. 137
Table 10.13 : Proposed landuse of the Kaliakair Paurashava..... 138
Table 11.1 : Selected Intersections for Volume Count Survey 146
Table 11.2 : Road network of Kaliakair Paurashava 147
Table 11.3 : O-D matrix of surveyed trips (in %)..... 149
Table 11.4 : Important roads in the Kaliakair Paurashava..... 150
Table 11.5 : Road standards for future development of the network 151
Table 11.6 : Proposed road for improvement with sufficient ROW and pavement width..... 153
Table 11.7 : Recommanded road standards..... 159
Table 11.8 : List of proposed new roads 160
Table 11.9 : Proposed new transportation facilities 163
Table 12.1 : Manning's "N" Values for Channel Flow..... 178

Table 12.2 : Storage Coefficients for flat land 178
Table 12.3 : Modified Rational Method Runoff Coefficients 179
Table 12.4 : Summary of Water Bodies in Kaliakair Paurashava 185
Table 12.5 : Existing man-made drains of the Kaliakair Paurashava 185
Table 12.6 : Spot Value and their Unit (Number of Spot (z) Value and their Statistics) 186
Table 12.7 : Spot Interval and Frequency 191
Table 12.8 : Contour Derived from Spot Elevation (Excluding Road Spots) 191
Table 12.9 : List of proposed new drains 197
Table 12.10 : List of existing and proposed infrastructures for drainage and flood control 197
Table 12.11 : Proposed new utility services. 198
Table 12.12 : SPT N-Values 203
Table 12.13 : Strength Characteristics 203
Table 13.1 : Standard of utility facilities and future need 221
Table 13.2 : Proposed new urban services. 226

LIST OF TABLES

Part-C: Ward Action Plan

Table 14.1 : Proposed landuse for Ward no-1 239
Table 14.2 : Proposed facilities for ward no -1 240
Table 14.3 : Proposed road for ward no-1 241
Table 14.4 : Proposed drainage for ward no-1 242
Table 14.5 : Proposed landuse for Ward no-2 247
Table 14.6 : Proposed facilities for ward no -2 247
Table 14.7 : Proposed road for ward no-2 248
Table 14.8 : Proposed drainage for ward no-2 250
Table 14.9 : Poposed landuse for Ward no-3 255
Table 14.10 : Proposed facilities for ward no -3 255
Table 14.11 : Proposed road for ward no-3 257
Table 14.12 : Proposed drainage for ward no-3 258
Table 14.13 : Proposed land use for Ward no-4 263
Table 14.14 : Proposed facilities for ward no-4 263
Table 14.15 : Proposed road for ward no-4 264
Table 14.16 : Proposed drainage for ward no-4 265
Table 14.17 : Proposed land use for Ward no-5 271
Table 14.18 : Proposed facilities for ward no -5 271
Table 14.19 : Proposed road for ward no-5 272
Table 14.20 : Proposed drainage for ward no-5 273
Table 14.21 : Proposed land use for Ward no-6 279
Table 14.22 : Proposed facilities for ward no -6 279
Table 14.23 : Proposed road for ward no-6 280
Table 14.24 : Proposed drainage for ward no-6 281
Table 14.25 : Proposed land use for Ward no-7 287
Table 14.26 : Proposed facilities for ward no -7 287
Table 14.27 : Proposed road for ward no-7 288
Table 14.28 : Proposed drainage for ward no-7 290
Table 14.29 : Proposed land use for Ward no-8 295
Table 14.30 : Proposed facilities for ward no -8 295
Table 14.31 : Proposed road for ward no-8 296
Table 14.32 : Proposed drainage for ward no-8 297
Table 14.33 : Proposed land use for Ward no-9 303
Table 14.34 : Proposed facilities for ward no -9 303
Table 14.35 : Proposed road for ward no-9 304
Table 14.36 : Proposed drainage for ward no-9 305

LIST OF FIGURES

Part-A: Structure Plan

Figure 1-1 : Flow Chart of Planning Process 4
Figure 8-1 : Scope of Work for Planning Division 103
Figure 8-2 : Organogram for a "A" Class Paurashava 104
Figure 8-3 : Proposed Urban Planning Division for "A" Class Paurashava 104

LIST OF MAPS

Part-A: Structure Plan

Map 1-1 : The location of Kaliakair Paurashava within Bangladesh 5
Map 2.1 : Kaliakair Paurashava in Regional Setup 13
Map 2.2 : Jurisdiction of planning area of Kaliakair Paurashava 17
Map 3.1 : Existing Growth Potentiallity of Kaliakair Paurashava 29
Map 3.2 : Existing Landuse of Kaliakair Paurashava 39
Map 3.3 : Regional/ National Road Network of Kaliakair Paurashava. 43
Map 6-1 : Population Density of the Study Area. 85
Map 7-1 : Structure Plan of Kaliakair Paurashava 89

LIST OF MAPS

Part-B: Urban Area Plan

Map 10.1 : Existing landuse of Kaliakair Paurashava 117
Map 10.2 : Landuse Plan of Kaliakair Paurashava 119
Map 11.1 : Important Roads of Kaliakair Paurashava 155
Map 11.2 : Proposed Circulation Network for Kaliakair Paurashava 161
Map 11.3 : Proposed Transport Infrastructure of Kaliakair Paurashava 167
Map 12.1 : Existing Drainage Network of Kaliakair Paurashava 187
Map 12.2 : Land Level of Kaliakair Paurashava 189
Map 12.3 : Proposed Drainage and Flood Control Components 195
Map 13.1 : Existing Urban Services 223
Map 13.2 : Proposed Urban Services 229

LIST OF MAPS

Part-C: Ward Action Plan

Map 14.1 : Landuse Proposal for Ward No. 01 243
Map 14.2 : Proposed Road, Drainage and Utility Services Plan for Ward No. 01 245
Map 14.3 : Landuse Proposal for Ward No. 02 251
Map 14.4 : Proposed Road, Drainage and Utility Services Plan for Ward No. 02 253
Map 14.5 : Landuse Proposal for Ward No. 03 259
Map 14.6 : Proposed Road, Drainage and Utility Services Plan for Ward No. 03 261
Map 14.7 : Landuse Proposal for Ward No. 04 267
Map 14.8 : Proposed Road, Drainage and Utility Services Plan for Ward No. 04 269
Map 14.9 : Landuse Proposal for Ward No. 05 275
Map 14.10 : Proposed Road, Drainage and Utility Services Plan for Ward No. 05 277
Map 14.11 : Landuse Proposal for Ward No. 06 283
Map 14.12 : Proposed Road, Drainage and Utility Services Plan for Ward No. 06 285
Map 14.13 : Landuse Proposal for Ward No. 07 291
Map 14.14 : Proposed Road, Drainage and Utility Services Plan for Ward No. 07 293
Map 14.15 : Landuse Proposal for Ward No. 08 299
Map 14.16 : Proposed Road, Drainage and Utility Services Plan for Ward No. 08 301
Map 14.17 : Landuse Proposal for Ward No. 09 307
Map 14.18 : Proposed Road, Drainage and Utility Services Plan for Ward No. 09 309

LIST OF ANNEXURE AND APPENDIX

Annexure

Annexure-A : Paurashava Gazette
Annexure-B : Permitted Landuse List
Annexure-C : Resolution of Final Consultation Meeting and Attendance List.
Annexure-D: Details of Road Network Proposal
Annexure-E : Details of Drainage Network Proposal
Annexure-F : Mouza Schedule of Development Proposal
Annexure-G: Mouza Schedule of Water Retention Pond
Annexure-H: List of Photographs

Appendix

Appendix-1 : Structure Plan
Appendix-2 : Landuse Plan
Appendix-3 : Transportation & Traffic Management Plan
Appendix-4 : Drainage & Environment Management Plan

List of Abbreviations and Acronyms

BBS	:	Bangladesh Bureau of Statistics
BDT	:	Bangladeshi Taka (Currency)
BM	:	Bench Mark
BTCL	:	Bangladesh Telecommunication Company Limited
BWDB	:	Bangladesh Water Development Board
CBO	:	Community Based organization
CS	:	Cadastral Survey
DGPS	:	Differential Global Positioning System
EMP	:	Environmental Management Plan
EPA	:	Environment Protection Authority
GCP	:	Ground Control Points
GIS	:	Geographic information System
Govt.	:	Government
GPS	:	Global Positioning System
H.Q.	:	Head Quarter
H/hold	:	Household
JICA	:	Japan International Cooperative Agency
KM/ km	:	Kilometer
LAN	:	Local Area Network
LCC	:	Lambert Conformal Conic
LGED	:	Local Government Engineering Department
LPG	:	Liquid Petroleum Gas
MV	:	Motorized Vehicle
NGO	:	Non-Government Organizations
NMV	:	Non Motorized Vehicle
O-D	:	Origin – Destination
Orgs.	:	Organizations
PCU	:	Passenger Car Unit
PD	:	Project Director
PMO	:	Project Management Office
R.F.	:	Representative Fraction
RHD	:	Roads and Highways Department
RoW	:	Right of Way
RS	:	Revenue Survey
RTK-GPS	:	Real Time Kinematics Global Positioning System
SoB	:	Survey of Bangladesh
SPSS	:	Statistical Package for Social Science
TCP	:	Temporary Control Point
TIN	:	Triangulated Irregular Network
ToR	:	Terms of Reference

CHAPTER-1

INTRODUCTION

1.1 Introduction

At present the rate of urbanization in Bangladesh is very high. Between1961 to 1981, the average urban growth rate was 8%. The present average growth rate is about 4.5%. According to the population census of 2001, the share of urban population was about 23.29% and at present it is approximately 25%. The importance of urban development is emphasized in terms of its role in the national economy. More than 60% of the national GDP is derived from the non-agricultural sectors that are mainly based in urban areas. Again, the most foreign exchange earning sectors, like, garment and knitwear enterprises are agglomerated in urban areas. These sectors earn over 70% of the foreign exchange. Remittance is also a major sector of foreign exchange earning and a large share of the remittance goes into the purchase of urban land. Surplus remittance is invested in business and manufacturing located in urban areas. These phenomena indicate the increasing role of urban areas being played in the national economy. The expansion of urban economy leads to the growth of urban population and concomitant haphazard urban spatial growth without planning. The rapid urbanization is marked by the creation of Paurashavas, whose number at present stands at 320. Paurashavas are created not only to provide urban services to their citizens, but also to create a livable environment through development of planned and environmentally sound living space.

The present infrastructure provisions in the Paurashavas are in a precarious state. Drains are mostly clogged that can not drain out water during heavy rains and natural drainage systems have either been filled up or occupied by land grabbers creating water logging during monsoon. Traffic in Paurashavas is increasing day by day with the increase in population and demand. But the substandard road network can not keep pace with the growing demand for movement. As a result, congestion becomes a common problem. Road networks are not developed in planned and systematic way leaving room for traffic congestion that increases economic loss to the people due to travel delay. The land use development in the Paurashavas is unorganized and unplanned, which isa major source of environmental deterioration. Building Construction Rules are not effectively enforced in the Paurashavas mainly for want of a well formulated Master Plan and qualified planning professional.

Under the above circumstances, it is high time to think about solving the problems of the Paurashavas that might otherwise be emerged critically in the future. To overcome all likely problems to come in future, the Paurashavas should go for planned development through preparation and implementation of a Master Plan. The Master Plan can be prepared exercising the power conferred to them by the Local Government (Paurashava) Act, 2009. The Upazila Town Infrastructure Development Project (UTIDP) aims to prepare Master Plan for 223 Upazila level Paurashavas and Kuakata Tourism center for a period of next 20 years. The project has provisions for separate plans for land use control, drainage

and environment, traffic and transportation management and improvement. The project also aims to prepare a Ward Action Plan (WAP) to ensure systematic execution of future infrastructure development projects. There is also aim to prepare proposals to enhance Paurashava revenue so that it becomes more capable to meet its own capital needs. Kaliakair is one of 19 Paurashavas within Dhaka Region under Package 01.

Thus the Master Plan of Kaliakair Paurashava suggests for the development of urban infrastructure, such as new roads and bridges/culverts, drainage facilities, street lights, markets, bus stands, solid waste management, sanitation, water supply, community facilities and other such infrastructure in order to equip the Paurashava to face future challenges of urbanization and economic regeneration. The Master Plan will initially focus on growth and development, social integration and environmental improvement following principles of sustainable development.

1.2 Philosophy of the Preparation of Master Plan

The philosophy behind preparation of Master Plan of the Upazila level Paurashava lies in the very motive of providing community welfare through a process of spatial organization, socio-economic rejuvenation, environmental improvement and provision of amenities to the present and future generations. The Master Plan aims for rational use of scarce land resources for concentrated development at urban scale following the principles of sustainable development.

1.3 Objectives of the Master Plan

As per the Terms of Reference (TOR), the objectives of the preparation of Master Plan of KaliakairPaurashava are to:

- Find out development issues and potentials of the Kaliakair Paurashava and make a 20-year development vision for the Paurashava and prepare a Master Plan in line with thevision for the development;
- Plan for the people of Kaliakair Paurashava to develop and update provisions for better transport and communication network, housing, roads, markets, bus terminals, sanitation, water supply, drainage, solid waste management, electricity, education, leisure and such other infrastructure facilities for meeting the social and community needs of the poor and the disadvantaged groups for better quality of life;
- Prepare a multi-sector short and long term investment plan through participatory process for better living standards by identifying area based priority-drainage master plan, transportation and traffic management plan, other need specific plan as per requirementin accordance with the principle of sustainability;
- Provide controls for private sector development, with clarity and security in regard to future development;

Provide guideline for development considering the opportunity and constrains of future development of the Upazila Town; andf. Prepare a 20-year Master Plan to be used as a tool to ensure and promote growth of the Kaliakair Paurashava in line with the guiding

principles of the Master Plan and control anyunplanned growth by any private and public organization.

1.4 Approach and Methodology

The UTIDP Project is aimed for substantial development of infrastructure and services for the Paurashava with optimum provision of opportunities for Paurashava dwellers and making scope for extending services to surrounding areas. The current project is preparing a Master plan of the Paurashava, where the existing condition and different problems are identified, studied and analyzed and the probable solutions are to be sought to ameliorate the same. The study moves through a process of data collection-analysis and fixation of objectives for planning. The approach is based on field survey for data collection and collection of information from secondary sources. The data is presented through maps, text and tabular form. Than the survey report and maps are prepared and submitted. Analysis of collected data is carried out to identify the nature and extent of problems prevailing in the Paurashava in order to fix the objectives of the actions to be undertaken in the form of planning and the interim report prepared and submitted. Through the process, involvement of the stakeholders has been ensured to make the planning as much sustainable as possible. For this purpose, continuous formal and informal discussions and meetings have been carried out throughout the project period using participatory approach. The discussions serve two purposes, first, a sense of belongingness develops within the minds of the stakeholders, particularly among the citizens, about the master plan to be prepared, and secondly, identification of problems and finding their solutions become easier with the participation of stakeholders, as the local stakeholders are more knowledgeable about local problems and possible solutions of those problems.

Figure 1-1: Flow Chart of Planning Process

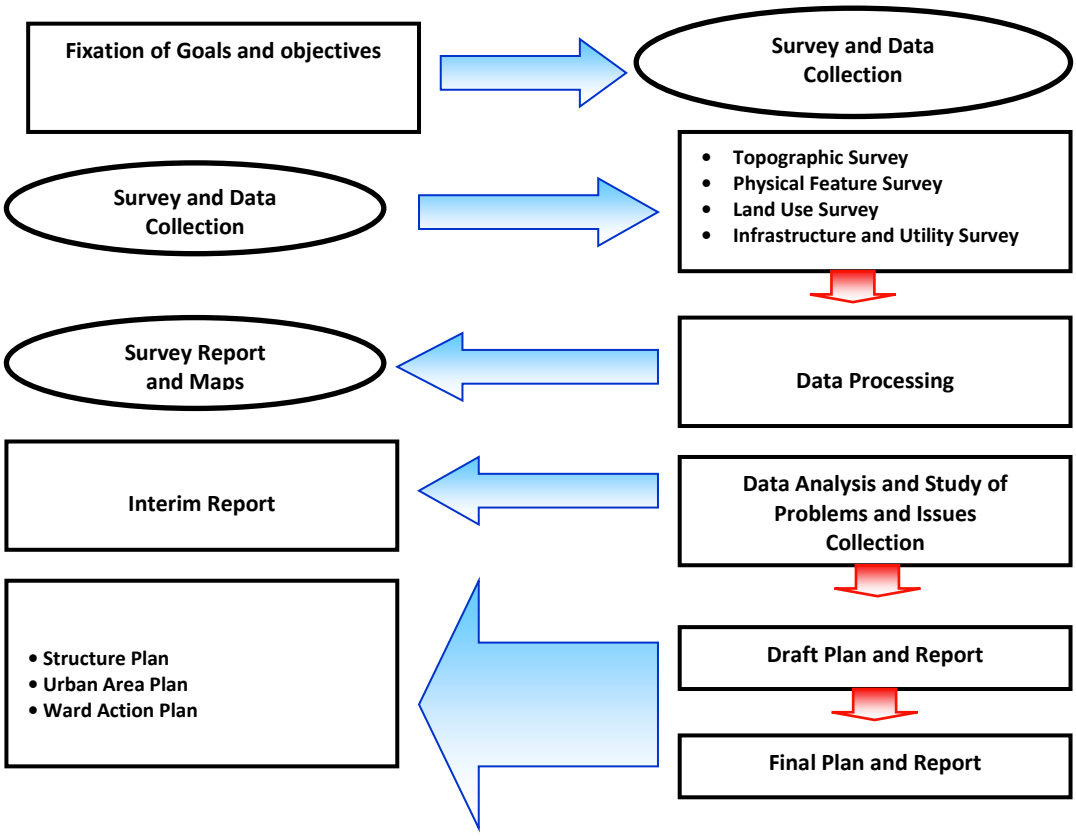

After doing all these jobs thoroughly the Draft Master Plan had been done based on a prepared planning standard for Paurashava level town and formulating future strategies for the corresponding area. Again after final consultation with the stakeholders on the prepared plan the Final Master Planhas to be completed.

Map 1-1: The location of Kaliakair Paurashava within Bangladesh

1.5 Scope of Work

The scope of work under this consultancy services covers all aspects related to the preparation of Master Plan, which includes Land Use Plan, Transportation and Traffic Management Plan, Drainage and Environmental Management Plan and Ward Action Plan for the proposed Paurashava. In order to prepare these plans, the activities contain but not limited to the following:

1. Visits have been made to the Paurashava at different stages of work of the preparation ofMaster Plan of Kaliakair Paurashava.
2. Feasibility for preparation of Master Plan has been submitted to the office of the PD, UTIDP.
3. An Inception Seminar has been organized at the Paurashava level to inform the Paurashava about the scope and Terms of Reference for the preparation of Master Plan. A thoroughinvestigation has been made based on potential scope and opportunities available in thePaurashava to develop a 20 year development vision for it linking the ideas and view of the Paurashava people.
4. Determination of the study area and planning area has been done based on existing condition, demand of the Paurashava and potential scope for future development. A detailed survey hasbeen conducted on the existing conditions of socio-economic, demographic, transportation and traffic, physical features, topographic, and land use of the Paurashava area following the approved format and data have been collected from primary and secondary sources. Analysis of such data and information has been carried out to find out the possible area of intervention to forecast future population of the Paurashava (15-20 years), vis-a-vis assess their requirementfor different services, such as physical infrastructure facilities, employment generation, housing, right of way and land requirement for the existing and proposed roads, drains, playgrounds, recreation centres and other environmental and social infrastructure. The following major tasks have been accomplished:
   - Identification and investigation of the existing natural and man-made drains, natural river system, the extent and frequency of floods, area of planning intervention have been done.Other works include study of the contour and topographic maps produced by the relevantagencies and review of any previous drainage Master Plan available for the Paurashava.
   - A comprehensive (storm water) Drainage Master Plan for a plan period of 20 years has been prepared considering all relevant issues including discharge calculation, catchments areas, design of main and secondary drains along with their sizes, types and gradients and retention areas with preliminary cost estimates for the proposed drainage system.
   - Recommendations have been made on planning, institutional and legal mechanisms to ensure provision of adequate land for the establishment of proper rights of way for (storm water) drainage system in the Paurashava.
   - Collection and assessment of the essential data relating to existing transport Land Use Plan, relevant regional and national highway development plans, accident statistics, number and type of vehicles registered for each Paurashava have been made.
   - Assessment has been made on the requirements of critical data and data have been collected through reconnaissance and traffic surveys, which should

estimate present traffic volume, forecast the future traffic growth, identification of travel patterns, areas of traffic conflicts and their underlying causes.

- Study has been conducted on the viability of different solutions for traffic management and development of a practical short term traffic management plan has been accomplished, including one way systems, restricted access for large vehicles, improved signal system, traffic islands, roundabouts, pedestrian crossings, deceleration lanes for turning traffic, suitable turning radius, parking policies and separation of pedestrians and rickshaws etc.
- Assessment has been done on the non-pedestrian traffic movements that are dominated bycycle rickshaw. Special recommendations should be made as to how best to utilize this form of transport without causing unnecessary delays to other vehicles. Proposals should also considerpedestrians and their safety, with special attention for the children.
- Assessment has been made on the current land use with regard to road transportation, bus &truck stations, railway stations etc, and recommendations to be provided on actions to optimize this land use.
- Preparation of a Road Network Plan based on topographic and base Map prepared under the project. Recommendation has been made on the road development standards, which serve as a guide for the long and short term implementation of road. Also Traffic and Transportation Management Plan and traffic enforcement measure have been suggested.
- Preparation of the Master Plan with all suitable intervention, supported by appropriate strategic policy, outline framework, institutional arrangement and possible source of fund for effective implementation of the plan.
- Preparation of a plan has been set out proposed Master Plan at 3-levels namely StructuralPlan, Urban Area Plan and Ward Action Plan.
- At the first level, policies and strategies have been worked out for the preparation of a Structure Plan for each Paurashava under the package. The Master Plan has been prepared consisting of Structural Plan, Land Use Plan, Transportation and Traffic Management Plan, Drainage and Environmental Management Plan and Ward Action Plan.
- A total list of primary and secondary roads, drains and other social infrastructures for each Paurashava for a plan period of next 20 years has been made. Examining and classifying according to the existing condition, long, medium and short term plans have been proposed and estimated cost for improvement of drain and road alignment and other infrastructures have been prepared.
- In line with the proposed Master Plan, a Ward Action Plan has been proposed with list of priority schemes for the development of roads, drains, traffic management and other social infrastructures for implementation during the first five years of plan period.
- With the help of concerned Paurashava, at least 2 public consultation meetings or seminars have been organized, one for discussion on Interim Report and the other on draft Final Report on the proposed Master Plan. Beneficiary's point of view has been integrated in the plan with utmost careful consideration.
- Preparation and submission of Master Plan and Report with required standards as per the TOR.

1.6 Organization of the Master Plan Report

The Master Plan Report is organized in three major parts with an introduction at the beginning. The three major parts contain various components of work under the UTIDP of LGED. The three major parts of the Master Plan of Kaliakair Paurashava are as follows:

INTRODUCTION: It describes the ToR of the UTIDP, philosophy and objectives of the Master Plan, methodology and scope of the work and organization of the Master Plan Report.

PART–A: The Structure Plan sets the conceptual framework and strategies for planned development of the Paurashava based on its potentials for next 20 years up to 2031.

PART–B: Urban Area Plan includes i) Land Use Plan; ii) Transportation and Traffic Management Plan; iii) Drainage and Environmental Management Plan; and iv) Proposals for Urban Services.

PART–C: Ward Action Plan presents ward wise detailed proposals for implementation within first five years of the Master Plan period of 20 years.

CHAPTER-2

INTRODUCTION TO STRUCTURE PLAN

The Master Plan Report is the fourth of the series of the reports to be submitted as per the ToR of the project "Upazila Town Infrastructure Development Project - Preparation of Kaliakair Paurashava Master Plan (Structure Plan, Urban Area Plan and Ward Action Plan)". Part A of this report describes the Structure Plan of Kaliakair Paurashava and Chapter 2 describes the conceptual issues related to the preparation of Structure Plan for Kaliakair Paurashava.

2.1 Background of the Paurashava

Kaliakair Paurashava, the study area, is located in Kaliakair Upazila about 15 km from District Headquarter, Gazipur. It is located in the southern-western part of Gazipur zila and central region of Bangladesh. Kaliakair Paurashava lies on 24º 05′ North latitude and 90º 10′ East longitude. It is about 70 km road distance from the capital city Dhaka. It is bounded by Chapair union and Mirzapur on the north, Dhaljora and Atabaha union and Savar Upazila on the south, Gazipur Sadar Upazila on the east, Mirzapur Upazila on the west.

Kaliakair Paurashava was established in 9 April 2001 as C class Paurashava and it became B class Paurashava in 14 September 2006 now it has upgraded as an "A" class Paurashava. Kaliakair is the second smallest upazila of Gazipur zila in terms of population. It came into existence in 1923. Nothing is definitely known about the origin of name of the upazila. There is a general belief that there was a big snake named Kalia nag in a pond called pukair in Bengali. In course of time kalia nag had changed as Kalia and Pukair had changed as kair due to phonetic transformation. It is generally believed that the upazila had derived its name as Kaliakair from those two words kalia and kair.

The Consultant has identified the Paurashava's existing jurisdiction area as 27.28 sq. km. (6738.96 acres) Among the nine Wards, Ward No. 7 have occupied largest area which is 1493.98 acres and Ward No. 8 is the smallest (412.18 acres).

2.2 Vision of the Structure Plan

The vision of the plan is the creation of an urban livable environment, where people irrespective of their socio-economic, demographic and religious identities can live and enjoy today within affordable means without sacrificing interests of tomorrow. The implementation of Master Plan of the Paurashava will translate this vision into reality.

To guide long term growth within the Structure Plan Area by means of demarcation of the future growth areas and indication of potential locations of major development areas includes: a) indication of important physical infrastructure; and b) setting out policy recommendations for future development. According to the Terms of Reference, the objectives of Kaliakair Paurashava StructurePlan are:

- Description of the Paurashava's administrative, economic, social, physical environmental growth, functional linkage and hierarchy in the national and regional context; catchments area; population; land use and urban services; agencies responsible for different sectoral activities, etc.
- Identification of urban growth area based on analysis of patterns and trends of development, and projection of population, land use and economic activities for next 20 years.
- Identification and description of physical and environmental problems of Kaliakair
- Paurashava.
- Discussion of relevant policies to analyze and find out potential scopes for the use in the present exercise and also find out constraints and weakness of the existing policy to suggest appropriate measures for the development and management of Kaliakair Paurashava.
- To provide land use development strategies.
- To provide strategies and policies for sectoral as well as socio-economic, infrastructural andenvironmental issues of development.
- To discuss about implementation issues including institutional capacity building and strengthening of Paurashava, resource mobilization etc.

2.3 Concepts, Content and Format of the Structure Plan

Concepts

Structure Plan is a kind of guide plan, or framework plan, or an indicative plan that is presented with maps and explanatory texts in a broader planning perspective than other components of Master Plan. Structure Plan indicates the broad magnitudes and directions of urban growth, including infrastructure networks, the placement of major facilities such as hospitals and upazila complex. A Structure Plan is not intended to specify detailed lot by lot land use or local road configurations and development proposals. Rather it identifies the areas where growth and change are such that more detailed local and action plans are needed. Structure Plan does not require excessive effort in gathering data and it is flexible and dynamic and can be changed to accommodate demanded changes. The present Structure Plan is an overall long term strategic plan for the Paurashava Shahar (Town), Kaliakair. Structure Plan is the 1st component of the Master Plan package. The other two lower level components are Urban Area Plan and Ward Action Plan. Structure Plan lays down the framework of the future plan including strategy and the sectoral policies. The Urban Area Plan and the Ward Action Plan detail out development proposals under the framework of Structure Plan. The extended area was selected in consultation with the Paurashava for possible extension of the Paurashava. But no development proposals are suggested for the extended part as existing Paurashava area is enough to accommodate population and services during Structure Plan period, that is, up to the year 2031.

Map 2-1: Kaliakair Paurashava in Regional Setup

Content and Format of the Structure Plan

The Structure Plan is an indicative plan that gives a brief on the future development of an area with policy guidelines. It is a long-term plan with flexibility in the sense that it sets down a broad framework for future development, but not the details. The format of a Structure Plan comprises written document and indicative major development locations presented in maps and diagrams as parts of the report. The written text analyses the issues that are not possible to be presented as diagrams, drawings and maps. Therefore, the written document is as important as the physical plan and diagrams and should be read in conjunction with each other.

2.4 Duration and Amendment of the Structure Plan

The Structure Plan is to remain valid for a period of 20 years from the time of its approval that is up to the year 2031. Structure Plan can contain two Urban Area Plan for the time period of 10 years each and four Ward Action Plan for the time period of 5 years each.

2.5 Structure Plan Area

In order to delineate Structure Plan Area boundary, there was a wide reconnaissance survey of the entire Paurashava area including those areas which have future potential growth. But since, the formation of Kaliakair Paurashava is 10 years back (2001); the development trend do not took much momentum as it required. It is still in her infinity. In addition, the Mayor and the Councilors opinioned in favor of keeping the Paurashava area encompassing the nine wards as exist for next 20 years. So, Consultant has considered 27.28 sq. km (6738.96 acres) with nine Wards as the Structure Plan area.

Map 2-2: Jurisdiction of planning area of Kaliakair Paurashava

CHAPTER-3

PAURASHAVA'S EXISTING TREND OF GROWTH

3.1 Social Development

Age-sex structure

Age-sex distribution indicates that population mostly increase naturally. The age-sex distribution implies that female population is less than male population in the Paurashava. In Kaliakair Paurashava, according to Population Census 2011; the number of female population was 83527 person and male population 73635 persons. 9.70% family members of the Paurashava have been found to belong to the age group of 0-4 years. On the other hand 6.24% peoples fall in the age group of 60 years and above. The highest population goes under the range of 18 to 34 years age group which consists of 32.64 % of the total population. So, in all the Wards the number of young and workable population is highest than any other aged group population.

Household Size

Family size ranges from 1-4, 5-8, 9-11and 11+ members, but most prevalent size is 1-4 and 5-8 members. There are both single and joint family systems. Ward No. 3 had major percentage of single family (92%) and Ward No. 5 had major percentage joint-family system (43%) compared to other Wards. Most of the families in the Paurashava are single family (78%) type and the average family member is 4.5 persons per family.

Marital Status

In the Paurashava 43.22% of male and 36.17% of female population of age 10 years and over was never married. In the same age group percentage of currently married males and females were 56.32% and 56.45% respectively and percentage of widowed and divorced were 0.36% and 6.84%, and 0.10% and 0.55% respectively.

Migration Pattern

According to the socio-economic sample survey-2009, about 94.5% households of Kaliakair Paurashava are permanent residents and 5.5% households are migrated. Migration occurred only in the ward no. 1, 2 and 3. In ward number 1, all the migrated households migrated after 2000 and in ward no. 2, all the migrations occurred during 1990 to 2000. In ward no. 3, 27.3% of the migrated households migrated from 1990 to 2000 and 72.7% of the migrations occurred after 2000. So the number of in-migrated population is going up. It is seen that in ward no. 1 and 2, all the migrations occurred from the other districts and from same Upazila respectively. In ward no. 3, 72.7% migrated households migrated from other districts. There are various reasons for the migration. It is found for ward no. 3 that migration occurred mainly for service or transfer and business or commerce purposes. In ward no. 1 and 2, the reasons for migration are mainly business or commerce and service or transfer respectively.

Growth Rate

In the Kaliakair Upazila, from the year 1974-1981, annual growth rate of population was 2.2%, and from the year 1981-1991 the growth rate of population was 4.1%. But he annual growth rate of population from 2001-2011 was 6.02% which was very high growth rate. On the other hand, for urban area the population growth rate increased to 2.28%. Regarding the increasing rate of growth for urban areas, the growth rate of the Paurashava area is being considered 4.02 percent.

Table 3.1: Population growth trend analysis of Kaliakair Upazila

Year	Growth rate (Decadal)	Growth rate (Annual)
1951-61	28.6	2.9
1961-74	42.9	4.3
1974-81	21.9	2.2
1981-91	40.5	4.1
1991-01	14.64	1.5
2001-11	60.2	6.02

Source: BBS Population Cencus-2011 (Community Series, Zila: Gazipur)

Educational status

By considering educational status, about 31.60% household heads in Kaliakair are in class VI-X, 18.74% households head are in class I-V, 17.6% household heads are in SSC/equivalent, 9.2% household heads are in HSC/equivalent, 6.3% household heads are in BSS/equivalent, 2.9% household heads are in MSS/equivalent, 0.4% household heads are above MSS and rest 13% household heads are illiterate.

The percentages of MSS and above MSS are nil in ward no. 1; 28% of the household heads are in class I to V. On the other hand both in ward no. 2 and ward no.3, the highest percentage of the household heads is 24% who studied in class V1-X. In ward no.4, there are no people above SSC level and the highest percentage is 64% that found for class V1-X. In ward no. 5, there are no educated people above HSC level; 33.3% of the household heads are illiterate and 23.8% household heads are in class I-V. In ward no.6, the percentage of SSC/equivalent passed household heads is the highest (38.1%). However, there is no educated person having a degree of MSS/equivalent and above. In ward no. 7, the percentage of household heads studied in class I-V is the highest (40%); 25% are in class VI-X and 15% are illiterate. In ward no. 8, the highest percentage is 36.7% that has been found for class I-V and in ward no. 9, the percentage of household heads with an education level of class V1-X is the highest (47.6%).

Religion

Kaliakair Paurashava is mixed with people of all religions. 66.45% of this Paurashava population was Muslim, 32.66% was Hindu and 0.74% was Buddhist, 0.12% was Christian, 0.04% was other.

Land Value

The official land value uses for calculation and collection of land revenue. In the physical planning aspects, study of land value is necessary for land acquisition. For the

preparation of physical development project including cost involvement, an idea on land value is necessary. In this study, the official land value is being quoted from the actual value considers by the Sub-registry Office of theKaliakair Paurashava.

Table 3.2: Mouza-wise land value in the Study Area, 2011

Sl. No.	Mouza name	Bari/Vita	Banijjik	Krishi Chala	Nal,/pukur/
1.	Pachlakkhi	3200	3200	13600	1546
2.	Kalampur	47272	47272	92873	4402
3.	Shafipur	46667	35820	122791	44706
4.	Chandara	209524	42462	144612	270833
5.	Purba Chandara	50250	50206	141056	20306
6.	Goal Bathan	83600	17142	131915	7646
7.	Pirerteki	4040	4040	125000	810
8.	Latifpur	36666	36666	92927	119709
9.	Tenglabari	57142	57142	120000	180000
10	Janertala	4000	4000	49640	5112
11	Sreefaltali	10000	10000	10000	9930
12	Kaliakair	58334	26000	78354	157097
13	Shimultali	49000	49000	50000	18182
14	Dainkini	6500	6500	95000	23636
15	Horitokitala	37538	37538	130000	14146
16	Uttar Boktarpur	3060	3060	23763	6746

Source: Kaliakair PaurashavaSub-Registry Office.

In this study, four types of land in nine mouzas are being considered. In the natural land market, land for homestead / housing construction is higher than other type of land and this scenario is prevailing in the Paurashava also. In another scenario, commercial land value is higher than homestead / residential land value. Bari, Vita, kanda, nama, pond and shop are these types of land are under the jurisdiction of agriculture land. For development activities, in case of land cost, those lands should be emphasized, though land development cost is higher than other type of lands.

Land Ownership Types and Patterns

Most of the land in Kaliakair Paurashava are high and medium high land, about 45% land are medium high and 38% land are high and only 6% land are low land, rest of the land are habitable land. About 41.6% of households in Kaliakair Paurashava hold 0-10 decimals land, 47.90% households hold 10-20 decimal land and only 10.5% households hold more than 20 decimal land. So it can be said for Kaliakair Paurashava that most of the land are in the hand of a few number of people.

3.2 Economic Development

Two basic elements of economic development i.e. employment generation and increase of productivity are found in the cities and urban areas than the rural areas. This is a common phenomenon for the developed and developing countries. Employment opportunities act as a strong pull factor for influx of job seekers in the cities and urban areas, the centers of productivity. Special features of the study area are that it covers a vast rural area, besides a small urban center of Paurashava town. A National Highway

(Dhaka-Tangail NHW) passes in the Paurashava and both the sides of the highway is occupied by huge tracts of agriculture land and sporadic homesteads, at places showing the signs of development along with the hats, bazars indicating the dominant role of agriculture and fishery. This indicates general feature of the study area as a mixture of rural and semi-urban nature. These special socio-economic features of the study area have been taken into consideration in conducting the study of the prevailing economic situation.

Commerce

Commerce includes purchase and sale of various consumer and durable items performed by the business person. In the study area, such activities are wholesale and retail trade, hotel and restaurant business, transport, storage services, hat/bazar, etc. Major part of trade and commerce of the study area is conducted through hat / bazar where agriculture produces, consumer items, merchandise for household and other farm and non-farm items are transacted. The market / bazar performs significant role on the Paurashava economy. It is observed that market / bazar provide good number of employment and act as an economic centre for the area of influence of the market / bazar. This market / bazar remain open everyday from morning to evening. Along with the daily business transactions, two market places are also used as hat which sits twice in a week. On the hat day farmers, traders, businessmen and many other informal professionals gather in the hats and run trades and business till evening. Actually, the market / bazar is the key supplying centres of all sorts of agro-products to the urban areas and other non-producing areas of the country, and similarly this market / bazar is the major distribution centres of industrial products to the vast majority of the rural people throughout the country at consumer levels. Importance of the market / bazar place can not be ignored, rather needs to be facilitated with provision of infrastructure facilities.

Two locations are found with agglomeration of commercial activities at hat / bazar area in the Paurashava. That hat / bazar are taking place in the core part of the Paurashava along with the road; tin-shed semi-pucca structures with parcels of open lands. Saturday, Monday and Wednesday of a week are the local Hat days. Those hat / bazars are prominent due to its availability of agro-product and fish. People from different Upazilas, Zilas and Capital City accumulate in those hat / bazars as a buyer.

Services

The service sector consists of the hotel and restaurant business; transport and communication, storage / godown, financial intermediaries, real estate, rental activities, public administration, education, health, community service and social work including social and personal services. The service sector significantly contributes to the local economy. Most of the service structures are housed in permanent structures. Also there are some temporary structures. It is found that 32% households are dependent on services and 30.6 percent are engaged in small business activities in Kaliakair Paurashava. There are different types of administration and government services like Paurashava

Office, Upazila Headquarters, sub-registry office, Police station and non govt. establishments like banks and NGOs working throughout the study area. Major investment by the banks are in the field of cash credit in the form of running capital and capital loan for setting up of business establishments, besides general banking facility. Some NGOs have also disbursed agricultural loan. The NGOs are rendering services in the fields of poverty alleviation programs, awareness building, health care, education, sanitation, micro-credit and training on income generating activities including skill development. NGOs provide services in the field of micro-credit; encourage social services, advance loan for poultry, fisheries, livestock, agriculture, house building, land purchase and capital loan for running business. NGOs also take part in various social activities like awareness building on environment, natural calamities, health and many other fields. A good number of people special women and poverty-stricken has been getting various types of services from the NGOs for quite a long period.

Primary occupation

Agricultural and farming related occupation in Kaliakair Paurashava is more dominating; about 25% households heads are involved in agriculture and farming. Besides agriculture and farming about 27% households are involved in business including 14% small business and 13% large business. 18% of household heads are involved in private service; the other occupations are Govt. officer 2%, skilled labor 3%, house wife 4%, teaching 2%, other Govt. employee 8%, Rickshaw/ Vanpooler/ Driver 1%, Handicrafts 3% in Kaliakair Paurashava. There are also 6% unemployed/ retired households head exists in Kaliakair Paurashava.

Income Level

In Kaliakair Paurashava, about 94% families are single earned, 5% families are double earned and 1% families are triple earned. Major portion of income come from business, service and agriculture. About 32% incomes come from service, 30.7% come from business, 25.2% from agriculture and 11.8% from other sources.

In ward no 4, 5 and 9 major portion of income comes from agricultures and in ward no 1 and 2 major portion of income comes from business. In ward no 3 and 6 major portion of income comes from service. In ward no 7 and 8 major portion of income comes from both business and service

About 2.1% households monthly earn tk.0-5000, 66.8% households earn tk.5001-10000, 24.8% households earn tk.10001-15000, 4.2% households earn tk.15001-20000, 1.7% households earn tk.20001-25000 and 0.4% households earn above tk.25000. The figure 5.2 shows the income (Tk. per month) categories of various numbers of households.

Expenditure Level

There are various kind of expenditure of individual household in an urban area such as food expenditure, house rent expenditure, water expenditure, electricity expenditure, gas expenditure, health expenditure, education expenditure, transport expenditure, recreational expenditure and others. Food expenditure is mandatory but other service-

oriented expenditures depend on fiscal condition of the urban dwellers and provisional system of urban authority.

According to socio-economic field survey-2009, 94.1% household has no house rent expenditure, 99.2% household has no water expenditure, 8.8% household has no electricity expenditure, 69.7% household has no gas supply expenditure, 8.0% household has no health expenditure, 15.5% household has no educational expenditure, 63.0% household has no transport expenditure and 24.4% household has no recreational expenditure. In Kaliakair Paurashava, minimum value of monthly food expenditure is tk. 2000; median value is tk. 4700 and maximum value is tk. 40000.

Education, food, habitat, cloth, treatment are the basic needs of each individual. These are indispensable in everyday life. Similarly water, electricity, gas, transport, and recreation are also necessary in every household. In Kaliakair Paurashava the highest maximum value of food expenditure is seen in ward no. 3 which is tk.40000. On the other hand lowest minimum value is tk.2000 in ward no.4, 7 and 8 and the highest median value is tk. 6000 which is seen in ward no.5. There are no minimum expenditure for house rent, water, gas, education, transport and recreation in Kaliakair Paurashava. The highest maximum value of house rent expenditure is seen in ward no. 3 which is tk.3000. There is no water facility in Kaliakair Paurashava. The highest maximum value of electricity expenditure is seen in ward no. 1 and 3 which is tk.1200 and the highest median value is tk. 300.

Agriculture

Agriculture dominates the economy of this Paurashava. Among agricultural produces, important items besides paddy are vegetables, local fruits, sugarcane, jute and mustards. Among the agriculture products, paddy, local fruits, mustards and vegetables are consumed locally and a considerable percent are using by the inhabitants of adjacent Upazilas.

Agro-based

There are several types of agro based industry in the Paurashava. Rice mill, saw mill, ice factory, seed processing industry and bakery factory are prominent agro based industry here. The industrial activities cover 3.62 acres of the study area. Local woods are being processed in the Saw Mill and locally produced paddy are using in the Rice Mill. Those industries have been established all over the Paurashava. But there is no big industry within the Paurashava area.

Employment Pattern

Occupation related to Business was found to be more prominent in Kaliakair Paurashava; about 27% households were involved in business of which 14% were involved in small business and 13% in large business. Besides business, agriculture and farming was the major occupation of about 25% households. 18% of household heads were involved in private service; the other occupations are Govt. officer 2%, skilled labor 3%, house wife 4%, teaching 2%, other Govt. employee 8%, Rickshaw/ Vanpooler/ Driver 1%, Handicrafts

3% in Kaliakair Paurashava. There were also 6% unemployed/ retired household heads in Kaliakair Paurashava. The table 5.4 represents the main occupation of the head of households according to ward in Kaliakair Paurashava.

In ward no.1 there are no percentages of occupation of Govt. Officers, Other Govt. employee, Teaching, Unskilled Labor and Hawker/Vendor. The highest percentage is 28.0 of Private Service.20.0 percent of occupation of Business is the highest in ward no.2. The highest percentages of occupation of Farming and Agriculture are 64.0, 61.9, 42.9 in ward no 4, 5 and 9 respectively. There are Govt. Officer and Teacher in ward no.5, 8 and 9 respectively. The highest percentages of occupation of Private Service are 33.3 and 30.0 in ward no. 6 and 8 respectively.

Informal Economic Sector

Informal sector covers a lot of activities which may be classified as Trading and Services. Various type of mobile or fixed salable items like food, fish, nuts, coconut, vegetables, daily household items, old cloth / garment, repairing of household gadgets, electronic items repairing, hair cutting, shoe polishing, etc. are considered as informal economic activities.

Informal entrepreneurs encounter many problems like dull business, unfavourable weather, fear of eviction, extortion, lack of permanent business location, exorbitant rate of interest, lack of credit facilities and unhygienic residential areas. Informal sector covers a lot of activities which may be classified as Trading and Services. Various type of mobile or fixed salable items like food, fish, nuts, coconut, vegetables, daily household items, old cloth/ garment, repairing of household gadgets, electronic items repairing, hair cutting, shoe polishing, etc. are considered as informal economic activities.

In the Paurashava, informal entrepreneurs mainly perform their business in the market/ bazaars and males are dominating this sector. Mostly 18-34 age-groups run the informal activities followed by 35-59 age-group. In total, 18 types of occupation grouped under two major categories of Trade and Services, adopted by the informal entrepreneurs in the Paurashava. Of the various occupations, trade includes sale of various food items, clothes, vegetables, meat, seed, medicines, etc. and service includes hair cutting, shoe repairing, umbrella repairing, mobile phone service, tailoring, etc. Informal entrepreneurs encounter many problems like dull business, unfavorable weather, fear of eviction, extortion, lack of permanent business location, exorbitant rate of interest, lack of credit facilities and unhygienic residential areas.

3.3 Physical Infrastructure Development

The jurisdiction of Kaliakair Paurashava is in regular shape. The bus station adjacent with the Paurashava boundary will be developed as a growth centre in future. Kaliakair Paurashava is primarily an agricultural area covering 54.5% of its total area and is privately owned. On the other hand 23.4% area is used for residential purposes and is also privately owned. Only 0.25% of the Paurashava area is owned by the government. The Paurashava is dominated by rural environment; as a result about 76.11% structures

are found katcha, constructed with temporary materials like bamboo thatch, jute stick, C.I. Sheet and wood. The semi-pucca structures are 14.2% that have wall made with brick and the roof with C.I. Sheets. On the other hand, 9.68% houses are pucca that is constructed with bricks and concretes. The building materials used for the construction of houses reflects poor economic condition of the owners. A linear development is found along the existing Regional Highway (Dhaka-Tangail Highway) of the Paurashava, such development should be continued naturally. A planning control will be needed on those linear expansions. At present, some scattered development likes rural homestead is found in the Paurashava premises; those should be controlled with the infrastructural planning and development.

A trend of urban growth is found around the Kaliakair and along the National Highway. A tremendous development trend is generating in ward number three. If the communication system develops, Kaliakair Paurashava will become a very important transaction point because of its nearness to Dhaka city. Residential and commercial developments have enormous potential that can be flourished in the Paurashava.

Road: The major roads of Roads and Highway Department (RHD), which passes through Kaliakair Paurashava, are the connecting road of Dhaka and Tangail and Tangail By-pass Road. On the other hand; Hospital road, Kaliakair bazaar road, College road, Thana road, Garail road and Paurashava road are maintained by Local Government Engineering Department (LGED). The following table-6.4 shows structure wise various types of roads in the Kaliakair Paurashava.

Waterways: Turag River opens a huge opportunity for water transportation in Kaliakair Paurashava. Trawlers and boats are frequently used for transportation.

Railway: Rail way is available at some wards of Kaliakair Paurashava. The railway crosses the Paurashava at Ward 3, 4, 6, 7, 8 and 9. The length of railway of this Paurashava is 8.7 km.

Airway: No airway facility is found in the Paurashava.

3.4 Environmental Growth

The plan has documented Kaliakair Paurashava area's environmental conditions, determines potentiality for present and past site contamination (e.g., hazardous substances, petroleum products and derivatives) and identifies potential vulnerabilities (to include occupational and environmental health risks).

3.5 Population

According to the Population Census 2011, total population of the Kaliakair Paurashava was 1,57,158 of which 83,527 are males and 73,635 females. The entire population is over 9 wards with different density. The most populous word was ward no-03 having 6146 peoples, while the least population was found in ward no-09 which population was 1486. The following table (table 3.3) represents the overall demographic scenario of Kaliakair Paurashava.

Table 3.3: Ward wise population of Kaliakair Paurashava, 2011

Ward No	Male Pop.	Female Pop.	Both Sexes
1.	4946	4532	9478
2.	2915	2744	5659
3.	3850	3702	7552
4.	889	835	1724
5.	5593	4530	10123
6.	2924	2798	5722
7.	34082	28545	62627
8.	14203	13186	27389
9.	14676	13282	27958
Total	83527	73635	157158

Source: BBS Population Cencus-2011 (Community Series, Zila:Gazipur)

Map 3-1: Existing Growth Potentiallity of Kaliakair Paurashava

Population Distribution

Total population of Kaliakair Paurashava was 1,57,158 according to population Census 2011. Table 3.4 represents ward wise population and density per sq. km. in the Kaliakair Paurashava.

Table 3.4: Ward Wise population density and percentage of Kaliakair Paurashava

Ward No.	Area (sq. km)	Ward wise Population	Density /sq. km
1	1.74	9478	5447
2	3.71	5659	1525
3	3.41	7552	2215
4	2.67	1724	646
5	2.14	10123	4730
6	3.25	5722	1761
7	6.05	62627	10352
8	1.67	27389	16401
9	2.64	27958	10590
Total	27.28	157158	5761

Source: BBS Population Cencus-2011 (Community Series, Zila: Gazipur) and land use survey 2009

Population Density

In the Kaliakair Paurashava, the average density was 5761 persons per sq.km according to the Population Census, 2011. Ward no-8 was found to have the highest density of 16401 persons per sq. km while the lowest density was found in ward no-4 consisting of 646 persons per sq. km.

3.6 Institutional Capacity

The Paurashava is responsible for Paurashava administration and also responsible for providing services, slum upgrading, infrastructure development and licensing of non-motorized transport within its jurisdiction. To perform the responsibilities efficiently as prescribed in the Local Government (Paurashava) Act, 2009 existing capacity of the Kaliakair Paurashava administration is not sufficient. The responsibility may be categorized as two broad heads named Revenue Collection including Budget Preparation and Delivery of Services. Three types of management system are involved with those two responsibilities and they are Top Management, Middle Management and Supervisory Management. A general scenario is found in those three category management system of the Paurashava i.e. lack of efficient manpower. Shortage of technical manpower in the Paurashava is also an administrative problem.

Allocated Manpower / Organogram

The manpower allocated by the Government for every Paurashava in the country except the Mayor and nine Counselors and the organogram according to the Local Government(Paurashava) Act, 2009 is presented in the Table-3.5 for 'A' Class Paurashava.

Table 3.5: Allocated manpower for Kaliakair Paurashava

Section under Divisions	Alocated Manpower
Administration	43

Section under Divisions	Alocated Manpower
General section	17
Accounts Section	05
Assessment section	05
Tax Collection and License Section	12
Municipal market section	04
Engineering Division	78
Water supply and sanitation section	34
Civil,electrical & mechanical Section	44
Health Division	28
Health and family planning section	24
Conservancy Section	4
Total	149

Source: Local Government Ministry of Bangladesh, 2009.

Existing manpower except the Mayor and Councilors in the Kaliakair Paurashava is presented in the Table-3.6. In total 12 employees as permanent staffs are in the Kaliakair Paurashava. Those employees are under the Administrative division, Health division and Engineering division.

Table 3.6: Existing manpower in the general and engineering division

Positions under Divisions	Number of employee
Administration Division	8
Secretary	1
Head Assistant	1
Store Keeper	1
MLSS	2
Lower Division Clerk	1
Night Guard	2
Accounts Division	2
Accountant	1
Cashier	1
Assessment Division	3
Assessor	1
Assistant Assessor	1
MLSS	1
Tax Division	4
Assistant Tax Collector	3
MLSS	1
License Division	2
License Inspector	1
MLSS	1
Health and Family Planning Division	4
Vaccinator	4
Hygiene Division	1
Conservancy Inspector	1
Engineering Division	12
Executive engineer	1
Assistant Engineer	1
Sub Assistant Engineer (Civil)	2
Sub Assistant Engineer (Power)	1
Work Assistant	2
Street Light Inspector	1

Positions under Divisions	Number of employee
Road Roller Driver	1
Garbage Truck Driver	1
MLSS	2
Total	**44**

Source: Proposed Annual Budget, Kaliakair Paurashava, 2011-12.

From table 3.6, it is seen that there are shortage of manpower in administrative, engineering and license division. However, it is a matter of disappointment that there is no staff in any division. In addition, no water supply division is found in the Paurashava as there is no provision of water supply facilities yet. Hence, existing scenario deserves more involvement of employees as well as strengthening the divisions by recruiting allocated HR; otherwise execution of master plan will be very difficult through present manpower attachment of the Kaliakair Paurashava authority.

Paurashava Town Planning Capacity

In Kaliakair Paurashava, there is no Town Planner; even there is no surveyor and draftsman. Hence, it is not possible for only 2 technical officers (Executive Engineer 1 and Assistant Engineer 1) to monitor and execute all the activities related to development control as well as to follow the guidelines of Master Plan. So, indeed, no town planning capacity exists in the Paurashava.

Implementation Capacity of the Paurashava Master Plan

In implementation procedure, preparation of Project Proposal is the primary step of the Master Plan. Due to the absence of apposite employee for the purpose i.e. Town Planner, the Paurashava is not capable of implementation of the Master Plan.

Conservancy and health services

In the Kaliakair Paurashava, only 4 Vaccinator works under health division In total, there are 15 employees for the purpose of street sweeping who works on casual basis. So, it is for sure, conservancy and health services are running in the Paurashava without any systematic procedure as well as following any healthy measures.

Logistic Support/Equipment

Logistic support and necessary equipment is limited for Kaliakair Paurashava which should be a really big concern. Two garbage trucks and 15 sweepers (on contact basis) are the only means of conservancy services. Except those trucks and road roller, other equipments are using for Paurashava administration.

3.7 Urban Growth Area

Physical growth of Kaliakair Paurashava town depends on the road pattern. Kaliakair Paurashava is connected with a National Highway. Concentrated development is the common feature of the Paurashava. A National Highway named Dhaka-Tangail Road passed through the Paurashava. So the agro product can easily transport in different districts.For a better living environment above environmental phenomenon should be considered with the systematic planning principles and regulatory measures. With these

views, people's awareness should be increased about the fair living environment through different public activities. Arrangement of landuses should be provisioned for all the public and private organizations as their necessities.

Kaliakair Paurashava is well connected with the National Highway and railway line and water ways for cargo transportation. Negligible urban facilities like water supply, cleaning of road, road lighting, dustbin facilities and road maintenance (constructed by the Paurashava, LGED and RHD) are the facilities provided by the Paurashava Authority. All urban facilities as a township development are necessary. Most of the urban services were developed when the Paurashava was formed as a growth centre. All roads in the Paurashava town are narrow and irregular (except the Nation Highway). Some of the roads submerge in rainy season. Widths of all semi-pucca and katcha roads are between 3 to 4 meters and somewhere they are using as footway. Those narrow and irregular roads may be widen and in regular shaped but not in all cases. Because some of the roads are in densely populated areas, pucca buildings and commercial establishments will be needed to demolish. Some roads did not preserve any scope for further improvement. Infrastructural facilities such as water supply and sanitation will not be possible to construct in those narrow roads.

The Paurashava is a naturally developed area. Planning effort yet not been taken by the public authority. Therefore, a mixed landuse scenario is viewed all over the Paurashava. These unorganized landuses should be framed within a planning manner with the physical and financial involvement of public authority. Average height of the Paurashava is 2.92 meter. So construction cost should be minimum considered to provide those facilities.

3.8 Catchment area

Kaliakair Paurashava, the study area, is located in Kaliakair Upazila about 15 km from District Headquarter, Gazipur. It is located in the southern-western part of Gazipur zila and central region of Bangladesh. The physical growth will be occurred due to highly fertile agricultural land. As it is agriculture based Paurashava, its development mainly depend on the future road pattern and urban services. According to the demand of the dwellers, urban services may be provided by the Paurashava in any side.

3.9 Landuse and Urban Services

Landuse

According to UTIDP Guideline for preparation of Paurashava Master Plan, land use of the study area should be divided into 19 major categories. But only 18 categories of land use are found in the study area. The Table 3.7 and Map 3.2 present a clear picture of land use categories of the study area. Kaliakair Paurashava Town centre area is the most built up area by comprising all kinds of urban and rural land uses.

Table 3.7: General Land Use of Kaliakair Paurashava (Area in Acre)

Sl No.	Land Use types	Ward Wise									Total	%
		1	2	3	4	5	6	7	8	9		
1.	Agriculture	144.66	267.14	378.74	0.00	143.54	156.41	263.03	124.49	231.33	1,709.33	25.36
2.	Circulation Network	15.15	17.70	29.78	16.77	17.71	19.21	45.55	20.55	18.69	201.10	2.98
3.	Commercial Activity	19.93	8.09	6.02	0.46	14.75	0.36	34.70	11.79	15.49	111.59	1.66
4.	Community Service	0.95	1.01	1.40	0.11	0.92	0.39	3.04	0.69	1.48	9.99	0.15
5.	Education & Research	4.15	1.28	21.73	0.39	9.02	0.73	1.58	1.50	2.97	43.35	0.64
6.	Forest		68.92		382.35	128.09	420.68	316.48	0.00		1,316.52	19.54
7.	Governmental Services	0.12	11.45	0.18	0.00	3.21	0.00	0.09	0.00	0.96	15.99	0.24
8.	Manufacturing and Processing Activity	6.18	193.74	57.67	108.58	56.96	14.47	158.61	58.85	117.50	772.56	11.46
9.	Mixed Use	4.73	0.57	1.23	0.20	4.34	0.82	9.68	2.39	9.11	33.07	0.49
10.	Non Government Services	0.08	0.12	0.03	0.00	0.00	0.00	0.00	0.07	0.04	0.34	0.00
11.	Recreational Facilities	0.15	0.00	0.00	0.00	0.00	0.00	11.27	0.00	1.07	12.48	0.19
12.	Residential	127.03	164.00	165.73	57.48	123.42	184.00	482.40	165.79	164.54	1,634.37	24.25
13.	Restricted	0.00	0.00	0.00	0.00	0.00	0.00	57.22	0.00	50.51	107.73	1.60
14	Service Activity	0.77	0.36	3.74	0.00	0.56		1.33	0.00	0.25	7.00	0.10
15.	Transport & Communication	1.71	0.00	2.06	0.00	1.51	0.25	2.91	0.00	0.00	8.45	0.13
16.	Urban Green Space	0.41	0.26	1.16	0.14	0.17	0.00	0.54	0.02	0.03	2.72	0.04
17.	Vacant Land	13.54	13.87	46.97	89.66	0.65	2.26	27.32	1.45	4.52	200.23	2.97
18.	Water Body	90.33	167.95	124.97	3.18	24.71	3.90	78.24	24.60	34.28	552.16	8.19
Total		429.86	916.45	841.40	659.33	529.53	803.47	1,493.98	412.18	652.77	6,738.96	100

Source: Land Use Survey, 2009

Major built up part of the Paurashava area is using for residential purposes. According to the land use survey table of the study area, it has been ascertained that 1634.37 (24.25%) acre of land is presently under residential use. Commercial and Processing & Manufacturing use occupied 111.59 (1.66%) acre and 772.56 (11.46%) acre respectively. From the survey results, it is found that the study area is dominated by urban character. The circulation network and mixed use occupied 201.10 acre and 33.07 acre respectively. A large part of 552.16 (8.19%) acre is occupied by the water bodies including the Turag River. While 9.99 acre of land is available for community services, 43.35 acre of land for educational facilities has been found in the land use survey.

Residential

Residential use includes residential house, residential quarters, rest house, slum, mess etc. Total residential area is 1634.37 (24.25%) acres. It has been appeared that Ward 7 has the most residential concentration while; Ward 1 possesses the second position having 30.53% residential land. Ward 4 has the lowest residential concentration.

Commercial

Commercial land use mainly comprises of different types of shops (book shops, cloth shops, department stores, grocery shops, stationary shops etc.), market, katcha bazaar and other lands being used for commercial purposes.Total commercial area is 111.59

(1.66%) acres. Survey result depicts that commercial activities are mainly concentrated in Ward 7, which is 32.32% of the commercial uses of the entire Paurashava. Ward 4 has the second highest commercial uses of land (0.34%).

Industrial (Manutacturing and Procissing Actvity)

Total industrial area is 772.56 (11.46%) acres. Survey revealed that Ward 2 has the highest level of land uses for Industrial/Processing and Manufacturing purpose. This type of uses include rice mill, saw mill, ice factory, Seed processing industry, bakery factory and other manufacturing and processing activities. It is noticed that Ward 1 and 6 has very low percentage of such type of land use.

Agricultural

Agricultural use is dominant land use in Kaliakair Paurashava. Around 1709.33 (25.36%) acres of land of the Paurashava is under agricultural use. It appears from field survey that Ward 3 has maximum agricultural land (378.74 acres). Ward 4 have no agricultural land use.

Education

Total area under this category is 43.35 (0.64) acres. Land that is used for College, High School, Primary School, NGO School, Madrasha and other means of education and research are considered in this section. As survey result shows, this type of use is maximum in Ward 3 (21.73 acres).

Government Services

This category includes all types of government offices like DC office, Zila Parishad, Upazila Parishad, LGED, DPHE, Fisheries, Social Welfare, Statistical Bureau, Health office, etc. Total land under this category is 15.99 acres.The Paurashava office is a tin shed- semi-pucca building formerly used by Union Parishad office. The building is known as Paurashava Office and situated in ward No 02. Surrounding lands are using for mixed use purposes.Kaliakair Paurashava office, UNO office, Food office, Sub-Register office, Upazila Primary and Secondary Education office, Water Development Board, Rural Development Board and other government offices are included in this category of land use. Mostly this type of land use is found in Ward 2.

Non Government Services

In Kaliakair Paurashava Paurashava non-government services are mostly concentrated in Ward 2 (0.12 acre) then comes Ward 1. Ward 4, 5, 6 and 7 of the Paurashava have no such type of land use.

Water Bodies

Water body of Kaliakair Paurashava mainly consists of ponds, ditches, khals, irrigation canals etc. It covers 552.16 (8.19%) acres of land. Ward 1 have the highest percentage (30.42%) of Water body in the Paurashava. Ward 6 has the minimum amount of water body comparing with other Wards of the Paurashava.

Recreational

According to the field survey it is revealed that only Ward 1, 7 and 9 has recreation activities. This ward accounts 0.15, 11.27 and 1.07 acres of land for recreational facilities. The rest 6 Wards have no such type of use.

Mixed-Use

Mixed-use areas are those where, either commerce is mixed up with residence or residence with commerce or residence with office or admixture of all the three. Sometimes small industrial enterprises are also found to co-exist with any one or all the above landuse. However, other admixture of diverse land uses is also found. Mixed landuse is a common character of all unplanned urban centers in Bangladesh. The degree of such admixture depends on the specific location of the area. If the area is closer to the urban centre than the more profitable landuse takes over the less profitable ones and co-existence of diverse landuse prevail for long till one fully takes over the other. In such areas usually commerce gradually takes over residential use.Survey reveals that high percentage of mixed use land is found in Ward 7. This landuse covers 33.07 acres (0.97%).

Circulation Network

All types of road including national highway, regional highway, primary, secondary, tertiary roads and Railway are included within this category. This landuse covers 201.10 (2.98%) acres of land.

Transport and communication

This landuse includes establishments to accommodate all transport and communication facilities such as bus terminal / stoppage, toll station, launch ghat, boat ghat, etc. and covers 8.5 acres of land.

Map 3-2: Existing Landuse of Kaliakair Paurashava

3.10 Paurashava Functional Linkage with the Regional and National network

National Network

Kaliakair Paurashava, is located in Kaliakair Upazila and about 15 km from District Headquarter, Gazipur. It is located in the southern-western part of Gazipur Zila and central region of Bangladesh. Kaliakair Paurashava lies on 24º 05′ North latitude and 90º 10′ East longitude. It is about 70 km road distance from the capital city Dhaka. Kaliakair Paurashava is well connected with Dhaka City by a National Highway. A National Highway named Dhaka-Tangail Road Passed through this Paurashava. This Paurashava is also connected with Railways and Water ways. So the agro-product and industrial product can easily transport in different parts of Bangladesh.

Regional Network

Kaliakair Paurashava carried a massive importance in the regional context. Firstly, a huge number of vehicles ply in the Paurashava because Dhaka-Tangail highway and railway line passes through the Paurashava. There is big market namely Kaliakair bazaar, is the renowned growth centre of the region which carrying out various commercial facilities. A number of regional and national important establishments such as Talibabad Satellite Data Receive Centre, Safipur Anser Academy, High-tech Park, National Scout Training Centre, Square Pharmaceutical Industry etc. and lot of garmemts industries are located in Kaliakair Paurashava which attracted the people towards the Paurashava of the region and different parts of Bangladesh.

Map 3-3: Regional/ National Road Network of Kaliakair Paurashava.

3.11 Role of Agencies for Different Sectoral Activities

Agencies responsible for utility facilities and municipal services are an important component for an area. Utility services include water supply, gas supply, electric supply, sewerage and drainage system, telecommunication system, fire services, solid waste management, etc. The concerned departments / organizations responsible for planning and development of utility services are shown in the following table.

Table 3.8: Agencies responsible for sectoral activities

Sl. No.	Sectors	Responsible agencies
1.	Electricity Supply	Rural Electrification Board (REB)
2.	Water Supply	DPHE / Paurashava/ Private
3.	Telecommunication	BTCL / Mobile Phone Companies
4.	Sewerage and Sanitation	DPHE / Paurashava/ Private
5.	Solid Waste Disposal	Paurashava / Private
6.	Fire Service	Fire Services and Civil Defense
7.	Post office	Postal Department

Source: Physical Feature Survey, 2009.

The authorities (as presented in the Table-3.8) should perform other roles need to be carried out with the assistance and support of other relevant government agencies. Those roles are:

- Provide existing and future service areas with full complement of related services to ensure that they can function efficiently.
- Identify depressed areas in each of the Ward where no improvement is being made and provide services with ensuring benefits for the dwellers.
- Ensure that within specific time (may be project period or private sector involvement process and a guideline frame for them) services will be provided according to the demand of the Paurashava inhabitants.
- Identify the existing procedural and institutional constraints and resolve them with full cooperation of other responsible agencies.

CHAPTER-4

CRITICAL PLANNING ISSUES

4.1 Transport

Van and rickshaw are two major transport modes in the study area. Motorcycle and Bicycle is the main mode for private users. Movement of motorcycle is also identified as major private mode. Inadequacy of bus service found normal scenario in the study area. The peak hour traffic movement is found in morning from 10 am to1 pm and in the afternoon from 5 pm to 7pm in general. Though overall traffic congestion is low, let it should not be increased. Establishment of bus route within the study area is another prior demand of the people.

From the physical feature survey, it is found that the hat / bazar in the study area is served by bituminous and brick soling roads. But the area is not served by well defined road hierarchy, nor is required now due to sparse use of roads by motorized vehicles. However, the induced activities due to the prospects of upward economic change may need to provide road network befitting with the need.

Highway traffic is comparatively high and dominated by mixed type of vehicles including non-motorized. Generally, surface of the highways is moderate. The road network is not facilitated by designated parking area, bus terminal and bus bay. The core urban area of this Paurashava is very congested and the road with of this area is very narrow and existing road network developed in an unplanned way. As a result, sometimes congestions and chaotic situation occurs for a little while. In spite of this situation, present road network is functioning well. But it has to be upgraded to accommodate the future increase of volume of traffic that is expected to increase due to the rapid growth of urban population and influence of Dhaka city growth.

4.2 Environment and Drianage

In Kaliakair Paurashava about half of the tube wells are slightly arsenic free, 5% tube wells are arsenic contaminated and 4% tube wells are out of order. Iron is also a source of ground water pollution. About 20-30% tube wells were found with the range of iron contamination. Though air pollution in Kaliakair Paurashava is not much, the heavy movement of vehicles on the Dhaka-Tangail Highway is the major source of air pollution in the Paurashava. Sound pollution is occurred during day time especially in particular areas because of busses, human haulers and other motorized vehicles playing loud horns. The drainage problem is also a problem for the inhabitants of the Paurashava as there is no sewerage line in the Paurashava and creates health hazards. Dysentery, diarrhea etc occurs due to water contamination by human wastes. These above problems are extremely important issues of concern for the Paurashava. Pragmatic planning/ solution and proper drainage plan are very pertinent issues which will be of utmost importance in planning Kaliakair Paurashava.

However, implementation of activities like roads, drainage, bridge/ culverts, housing and industrial establishments and bazaars will radically change the natural topography and landuse pattern. The agricultural land will be converted into urban and semi-urban area. Existing scenic beauty will disappear; water bodies will lost and general slope will be diminished for earth filling due to urbanization. Therefore, in the process of preparation of Structure Plan, Urban Area Plan and Ward Action Plan, consideration of those factors will be made for keeping the natural environment livable.

Drainage Facility: Nearly non-existence, very shallow type is the major characteristics of drainage facilities in the Paurashava. Those drains are not continuous and open and not facilitated all the Wards.The drainage condition, serviceability, structural condition, obstruction, situation, blockage are found in those drainage networks. Water drained irregularly through those networks and they are also using as solid waste dumping ground.Drainage network in the Paurashava is mostly under public initiative. There is no well organized, well constructed drainage pattern / network encompassing all the Wards of the Paurashava. Drainage aspects plays a vital role in clearing waste water but the survey finds most of the drainage network unable to function due to poor maintenance, design, debris accumulations and faulty gradients. Drainage must receive image priority in Ward Action Plan as water logging within selected places of Paurashava is saver, therefore, planning options for drainage of the future should be seriously pursued. The present inefficient drainage needs to be well designed encompassing all the Wards right from household level to main road. There is no drain for household waste. Existing open drains are obstructed with rubbish and reduce the discharge facilities, creating health hazards.

4.3 Physical Infrastructure

Most of the lands in the Paurashava area are acting an important role on the supply of agriculture commodities in different Paurashavas and Zilas. Development activities are reducing the agriculture land rapidly. This trend should be controlled through the imposition of development control, but the contemporary regulations and their management is not enough to control such development activities.

About 2 to 3 meter earth filling will be needed for every development activities in the Paurashava. So, bulk development should not be encouraged due to the huge cost involvement. Poor soil condition is another problem of bulk development. Lowlands are also providing natural drainage facilities in the area.

The Paurashava is a naturally developed area. Planning effort yet not been taken by the public authority. Therefore, a mixed landuse scenario is viewed all over the Paurashava. These unorganized landuses should be framed within a planning manner with the physical and financial involvement of public authority.

All roads in the Paurashava town are narrow and irregular (except the Nation Highway). Some of the roads submerge in rainy season. Widths of all semi-pucca and katcha roads are between 3 to 4 meters and somewhere they are using as footway. Those narrow and irregular roads may be widen and in regular shaped but not in all cases. Because some of

the roads are in densely populated areas, pucca buildings and commercial establishments will be needed to demolish. Some roads did not preserve any scope for further improvement. Infrastructural facilities such as water supply and sanitation will not be possible to construct in those narrow roads.

Urban facilities provided by the Paurashava authority are not enough. All urban facilities as a township development are necessary. Most of the urban services were developed when the Paurashava was formed as a growth centre. Inhabitants of the Paurashava make their opinion (during consultation meeting) in favour of Paurashava system.

Problem relating to the housing is mostly concerned with the poor community. Apart from dwelling, poor piped water supply and frequent load shedding are daily problem for the inhabitants. Almost all the households use tubewell as their source of drinking water. In a nut shell, municipal services are not adequate. Among these, drainage and toilet facilities are two major problems in most part of the Paurashava. The Paurashava cannot solve the problems due to scarcity of fund.

Encroachment on drainage reservations causes inundation to many areas, including houses and roads, during heavy storms. There is hardly any roadside drain. And if any, the roadside drains are inadequate due to insufficient capacities and incorrect gradients.

The Paurashava building is so poor condition that the employees of the Paurashava cannot perform their jobs properly.

4.4 Social and Municipal Facilities

The Paurashava is quite poor in respect of basic utility & other social services and facilities. Information collected through Socio-economic survey reveals basic utility facilities. Water supply network is available in the Paurashava area. 100% of the households are using hand tube wells as main source of water supply for drinking and cooking purpose. 80% of the residents use pond water for washing and bathing purpose. About 1886 tube wells are available in the entire Paurashava area. From a study made by Department of Public Health Engineering (DPHE) in 2003, 4.71% of the total tube wells are contaminated by arsenic. Ground water level during dry and wet seasons are 21ft and 10ft respectively. Almost all the Wards are connected with electricity supply in moderate level. Some areas have not electricity connection. Drainage and Sewerage and Solid waste are also in same condition. Gas supply is available in the town centre of Kaliakair Paurashava area. But the coverage is not so much. Electricity supply for household lighting and for other purposes exists but with frequent load shedding.

Drainage, sewerage and sanitary toilet facilities are very much important facilities for an urban area. Drainage and Sewerage facilities are very poor. According to household survey Drainage and Sewerage facility are unavailable in Kaliakair Paurashava. On the other hand hundred percent of sanitary toilet facilities is observed in every ward in Kaliakair Paurashava. Due to limitation of drainage facilities water logging during rain is common phenomenon. Almost all the Wards have no sewerage system and toilets are mostly consists of sock pits. Overall garbage disposal system is poor. Formal Solid waste

dumping ground is not available and mostly disposes on open streets. Waste collection is being collected through NGOs but not well organized all over the study area.

Sewerage Facility: Sewerage system is very important component from the environmental point of view. Almost all the area of the Paurashava is devoid of sewerage facilities. There exists a minor process of development in certain selected Wards but limited to government quarter only. Regarding ownership of toilets it varies widely in most of the Paurashava area. Most of the households have their own toilets.

Toilet Facility: Toilet system of the study area is mostly categorized as semi-pucca. In spite of this, Paurashava has a modest development of pucca toilets in government zones. Sewerage system has not been introduced on a trial basis as to their popularity and acceptance. Table and the graph below gives total picture regarding toilet facility in the Paurashava. Ownership of toilets varies widely in most of the study areas. Most of the households have their own toilets. The overwhelming head of the households responded service quality not satisfactory as most of the above facilities are absent.

Water Sources**:** Hand tubewell and ponds as water sources exists in most of the Wards of the Kaliakair Paurashava. Ownership of hand tubewell mostly goes to households own property.

Besides these, other issues like graveyard, open public space, education facilities, religious facilities are inadequate in this Paurashava. Though there are formal graveyards, but for proper utilization formalization and maintenance is required. Up gradation of Hindu Shashan ghat is required.

4.5 Landuse Control

Accommodation of future thrust of growth due to the rapid growth of urban population and influence of Dhaka city demand for supply of safe drinking water, providing safe and easy accessibility, use of agriculture production in income generating activities and create provision for further investment will increase.

The primary motive is to exercise control over unorganized development and promotion of planned infrastructure development to accommodate future urban growth. The Paurashava will be developed as a self-contained town in rural environs.

To increase the agro-product and use them in income generating activities, a vast agriculture land will be used and at the sametime, the existing agriculture land should be preserved. Further residential expansion should be controlled through the imposition of development control. In this context, concept of cluster development and compact township approach should be provisioned in the plan. Vertical development will be encouraged rather than horizontal to save the agriculture land.

Major aim of the Landuse Policy 2001 was to prevent indiscriminate conversion of agricultural land in to non-agricultural use, because such conversion may be threatened for food security of the country. Such conversion should be prohibited with the multi-sectoral use of land. During implementation of Urban Area Plan / Ward Action Plan, necessary control should be imposed according to the following manner.

1. High value agriculture land should be preserved only for agriculture purposes. The land produces three crops in a year are under this category. Any physical development activities should be prohibited by the Paurashava authority. In the Paurashava a major portion of land is demarcated as high value agriculture land.
2. Drainage congestion due to the indiscriminate development activities is another critical issue. With the increase of population and commercial activities, lands of the Paurashava town are being converted for habitation. Natural development of those settlements somewhere creates drainage congestions. In the core urban area the existing roads are very narrow and there is a absence of drainage network. So, water logging is a common phenomenon in this area.
3. Missing links in road transportation creates accessibility problem. In the intersections, lands are using by commercial activities including daily bazar and saw mill which are increasing traffic congestion.
4. Easy accessibility with neighbouring Upazilas and a regional linkage is needed. Those linkages will grave huge amount of agriculture land. The single crop land may be used for this purpose.

4.6 Disaster

Disaster is the tragedy of a natural or man-made hazard that negatively affects society or environment. Disaster can be classified into two categories: natural disaster and man-made disaster. Natural disaster is the effect of flood, volcanic eruption, earthquake or landslide, draught, epidemic, etc. that affects environment and leads to financial, environmental or human losses. Man-made disasters is resulting from human intent, negligence or error, or involving a failure of a man-made system.

The Paurashava area including the Kaliakair Upazila has affected by the several major natural disasters ranging from Cyclone, Flood to Water logging and Draughts, etc. The periods of those disasters are 1998, 2000, 2004, 2007 and 2008. Very scanty attempt has been made by the government to rehabilitate people after the natural disaster.

Urbanization is converting lands for residential use. Agricultural lands and water bodies are being chosen most frequently and the lands are being converted into urban settlement. In Kaliakair Paurashava, wet lands are being filled up and agricultural lands are being converted. This has been identified as the major man-made disaster accelerating the degree of conversion year to year. Use of poisonous insecticides on the agricultural land is another man-made disaster which will affect in the long-run.

4.7 Laws and Regulations

The regulations prescribed in the Local Government (Paurashava) Act, 2009 are not directly related with the physical development activities and their control. The Building Construction Ordinance, 1952 is called the mother regulation to control all type of physical development but no instruction is being included in the Local Government (Paurashava) Act, 2009. The Paurashava authority approves the building plan and excavation of tank without any regulatory control.

The regulation prescribed in the Local Government (Paurashava) Act, 2009 on the preparation of master plan is called traditional regulation. In the modern world, the

concept of master plan became obsolete. In this project, the so called master plan, as mentioned in the Local Government (Paurashava) Act, 2009 considered as a package and the plan included in this package named Structure Plan, Urban Area Plan and Ward Action Plan, though there is no regulation in the country on the preparation and implementation of those plans.

In the Paurashava about 28.04 % land is under agriculture use. Most of those lands are private. Different type of help is necessary for the farmers involved with those agriculture lands. Section 13(1a) of the Agricultural Development Corporation Ordinance, 1961 prescribed regulation on the function of the Corporation and said that "the Corporation shall make suitable arrangements throughout Bangladesh, on a commercial basis, for the procurement, transport, storage and distribution to agriculturists of essential supplies such as seed, fertilizers, plant protection equipment, pesticides and agricultural machinery and implements." Where the Corporation is absent, how the farmers will get benefit prescribed in the section 13(1a)? To increase the agricultural commodities such type of help is necessary.

Except the Paurashava Town (Township development areas), other areas are rural. To generate rural-based township environment, those rural areas should be preserved. Rural development components as prescribed in the section 7(1a) of the Bangladesh Rural Development Board Ordinance, 1982 should be provisioned to control those rural areas. As prescribed in the section 7(1a), functions of the Board shall be "to promote village-based primary co-operative societies and Thana Central Cooperative Association (TCCA) with a view to enabling them to be autonomous, self-managed and financially viable vehicles for increasing production, employment generation and rural development."

CHAPTER-5

PAURASHAVA DEVELOPMENT RELATED POLICIES, LAWS AND REGULATIONS

5.1 Indicative Prescription of Policy for Paurashava in the light of the Different Urban Policies, Laws, Regulations and Guidelines

The preparation of Structure Plan, Urban Area Plan and Ward Action Plan for the Kaliakair Paurashava is highly depended on the policies and relevant contemporary rules and regulations prescribed by the government. In preparation of the above Plans, guidelines and strategies prescribed through the policies are considered carefully. Contemporary rules and regulations help to formulate the process and procedure for development control.

Urban Land Management Policy

It is necessary to impose control on the use and development of urban land. A range of urban planning tools including landuse planning, transportation planning and management, site planning, subdivision regulations and building regulations can be applied to minimize environmental impacts of urban development activities.

Policies

- Protect sensitive land resources by minimizing activities threatening environmentally sensitive areas.
- Manage hazard-prone lands through improvement of environmental management practices throughout the Paurashava.
- Conserve open space, as identified through a participatory planning process that will effectively preserve drainage system, provide greater opportunities for recreation and meet the minimum needs of aquifer recharge.
- Protect heritage structures and archaeological and cultural sites through appropriate schemes, projects and regulations.
- Control excessive urban sprawl and manage prime agricultural land through the implementation of regulatory reforms.
- Formulation of land information system, land market assessment regulations, efficient and transparent land record and registration system, etc.
- Increase the supply of land for the poor through reforming land transfer laws to counter trends towards land accumulation.
- Adoption of taxation policies that discourage speculative investments in land that is left undeveloped for extended periods of time.
- Implementation of land-banking and land-pooling programs that allow the government to increase its pool of land which can be exchanged for low-cost housing sites in the Paurashava;

- Undertaking land readjustment projects that include low-cost land and housing sites.
- Undertaking land-sharing schemes and tenancy reforms for establishing clear rights of tenants.
- Allocating khas land/acquired land for housing the poor.
- Allocating reasonable proportion of land in urban places for housing the poor.

Strategies

The strategies necessary to implement the policies of the urban land management is the use of planning tools in land management. Those planning tools may be structure planning, local planning and action planning. Second strategy is the landuse zoning. This tool may be used to:

- Protect productive agricultural lands by limiting the intrusion of non-agricultural uses;
- Manage floodplains by controlling uses of land within hydrologically defined areas subject to floods of a designated frequency;
- Preserve wetlands by limiting permissible uses to those that do not entail significant surface disturbance or runoff and substantially restricting land-disturbing uses within the areas identified as wetland areas;
- Restore and conserves natural canals and ponds.
- Facilitate planned unit development by allowing flexible design and clustering of residential development with higher densities on one portion of a land parcel so as to allow agricultural development or to provide increased open space or natural cover elsewhere on the parcel;
- Preserve open space by designating land areas for a variety of purposes such as recreation, future use, green belt, etc.

Strategies of land development for the Paurashava according to the Urban Land Management Policy may be followed through some techniques such as land pooling / readjustment, guided land development, land sharing, sites and services schemes, etc.

Landuse Policy

Bangladesh Landuse Policy was prepared and notified in the year 2001. Major aim of the policy is to prevent indiscriminate conversion of agricultural land in to non-agricultural use, because such conversion may be threatened for food security of the country. The expansion of residential, commercial, industrial and socio-economic uses will encourage the diminishing trend of agriculture land. Through the policy, government has encouraged Compact Township and vertical expansion of the different type of building rather than horizontal expansion.

Objectives

The objectives of the Landuse Policy are to:

- Prohibit the recent practice on conversion of agriculture land into non-agricultural use to ensure food security for the people.
- Impose zoning provision to control the better use of land according to the nature of land located in different regions.
- Rehabilitation of landless people on the alluvion lands alluviated from river, Haor or sea.
- Preserve khas land for future physical development activities.
- Confirm landuses in relation with the existing natural environment.
- Use of land in favour of job creation, landlessness and poverty alleviation.
- Control land pollution.
- Construction of multi-storied building with accommodation of various purposes in public and private sector for ensuring minimum land coverage.

About 46% land of the Kaliakair Paurashava is under the agricultural practices. According to the Landuse Policy, those lands should be preserved as agriculture land. For such preservation, some guidelines prescribed in the Landuse Policy will be considered they are – in case of rehabilitation of the landless people, Khas land will be emphasized for distribution by the government.

Housing Policy

Housing, in the context of overall improvement of human settlements, is considered by the Government of Bangladesh as an integral part of culture and planning for economic development. The Global Strategy for Shelter by the year 2000 adopted by the United Nations in November, 1988 calls upon governments to take steps for formulating a National Housing Policy, 2004 in the light of "the enabling approach" for achieving the goals of the strategy.

The housing problem in the country is of serious magnitude. In addition to the large number of homeless households; the rapid growth of slums and unauthorized squatter settlement; the increasing cost of land and construction materials; rampant speculation and the phenomenal increase in house rent, the problem is compounded by non-availability of basic civic services, including water and sanitation to the bulk of the population and acute shortage of affordable and adequate shelter for the poor and vulnerable groups. The housing shortage was estimated in 1991 to be about 3.10 million units, composed of 2.15 million units in rural areas and 0.95 million units in urban areas; with the bulk of the backlog consisting of katcha un-serviced units. The housing shortage is likely to exceed 5 million units by the year 2000 A.D. The current housing stock is deteriorating fast due to aging, general neglect, poverty and civic apathy on the part of the dwellers.

Objectives

The objectives of the National Housing Policy are to:

- Make housing accessible to all strata of society and to accelerate housing production in urban and rural areas with major emphasis on needs of the low and middle-income groups, the high priority target groups will be the disadvantaged, the destitute and the shelterless poor.
- Make available suitably located land at affordable price for various target groups, especially the low and middle-income group.
- Develop effective strategies for reducing the need to seek shelter through formation of slums, unauthorized constructions, encroachments and shanty dwelling units and to improve the existing ones environmentally and, where possible, to relocate them in suitable places.
- Rehabilitate disaster affected households and houses affected by fire accidents.
- Mobilize resources for housing through personal savings and other financial input's and by developing suitable financial institutions.
- Make effective implementation of the housing programs, promote use of locally developed materials and construction techniques and increase production of forest-based building materials such as timber, bamboo or grass. Attempts will be made to develop alternative and durable materials based on locally available raw material.
- Develop institutional and legal framework to facilitate housing.
- Improve and enhance the character, quality and environment of the existing residential areas.
- Develop new strategies and undertake revision of the policy from time to time to cope with the emerging housing needs and problems in the country.
- Undertake action-oriented research in all aspects related to housing and foster minimization of cost and rent.

Rural Homestead

Clause 5.9 of the Housing Policy describes about the rural housing. The Kaliakair Paurashava is rural based urban area. Rural character is the dominating issue in the housing sector. In the Housing Policy, following measures are suggested to improve rural housing:

- Avoiding unnecessary displacement of rural settlements due to development projects and where unavoidable, makes proper rehabilitation of the households, with full community involvement.
- Encroachment on agricultural land by proliferation of homestead should be discouraged. Efforts should be made for planned densification of rural homesteads. Subject to availability of khas lands, programmes similar to 'Adarsha Gram' programme of the Ministry of land will be undertaken in rural areas.

- The coordinated provision of water supply, sanitation, electricity, roads and other basic infrastructure services to existing and new habitations.
- Providing assistance by way of providing credit, dissemination of appropriate technology and delivery system for promoting housing.
- Initiating schemes for increased employment opportunities and income generation by extending appropriate credits and advice, so that housing affordability is enhanced.
- Establishing suitable institutional structure including strengthening of existing organizations at district and local level, with the responsibility for planning, financing, implementation, supervision and monitoring of rural housing schemes, and with the full involvement of beneficiaries, NGOs and CBOs, giving special attention to the needs of the poorest segments, specially women and disadvantaged persons.
- Linking the development of housing sites and the upgradation of rural housing with the activities under the Bangladesh Rural Development Board (BRDB) and other programmes for the creation of rural assets and employment.

Slums and Squatter Settlements

Clause 5.10 of the Housing Policy describes about the slums and squatter settlements.

The poor environmental condition in slums and squatter settlements create health problems for their residents and those in the adjoining areas. Those areas may be Paurashava Town. Keeping in view the policies of planned growth of urbanization, income support and poverty alleviation and together with steps to arrest the growth of new slums in urban areas, the Government would take steps to:

- Encourage in-situ upgradation, slum renovation and progressive housing development with conferment of occupancy rights, wherever feasible, and to undertake relocation of the squatter settlements from the sites that need to be cleared in public interest.
- Expand provision of water supply, sanitation and other basic services in slum and other settlements occupied by the poor.
- Ensure proper maintenance of amenities in slums and squatter settlements through community involvement and decentralized institutional arrangements.
- Integrate the provision of physical amenities slums and squatter settlements with basic services including maternal and child welfare services and health care, structured on community participation and involvement of voluntary agencies and management by local bodies.
- Provide night shelters and pay and use public toilet for the footpath dwellers and the homeless.

Infrastructure

Clause 5.2 of the Housing Policy describes about the infrastructures related with the housing. Most of those infrastructures are needful for housing construction and preparation of master plan. Following measures are recommended for development and improvement of infrastructure for housing:

- Increase investment by national and local government agencies in order to meet the rapidly growing needs of serviced land and to improve the availability of services in different settlements.
- Promote a balanced pattern of urbanization through a policy of decentralization of investments and incentives for the growth of secondary, intermediate and small towns so as to reduce pressure on metropolitan cities and to control unregulated conversion of agricultural and forest land for the purpose of housing.
- Develop economically buoyant and socially attractive secondary and intermediate towns by strengthening their linkages with contiguous rural areas and market centres as part of the integrated and planned development of the region and to reduce migration to the larger cities.
- Make necessary investments to increase within a reasonable time, the coverage of entire rural and urban population for potable water supply and basic sanitation.
- Increase investments in public transport and traffic network to improve mobility of people, particularly that of the poor.
- Encourage the use of infrastructure construction technologies, which are cost effective, incrementally upgradeable and environmentally appropriate.
- Provide government support for extension of infrastructure based on the participation of the people and private developers, NGOs, CBOs or on innovative systems of infrastructure leasing.
- Provide Government assistance to the local bodies for adequate cost recovery of investment on infrastructure, proper maintenance of services and upgradation of the capability of the personnel in local bodies and functional agencies.
- Provide opportunity for community participation and recognize people's initiative in the design, installation and the upkeep of services within the framework of the development programmes.

Strategies

The salient features of the housing strategy are:

- Housing will be given due priority in the national development plans treating it as a separate sector by itself.
- The role of the Government in housing will primarily be that of a facilitator or enabler in order to increase access to land, infrastructure, services and credit and to ensure availability of building materials at a reasonable price, specially for the low and

middle-income groups and to create and promote housing finance institutions; whereas actual construction of housing will generally be left to the private sector developers, the people themselves, and the NGOs.

- Greater emphasis will be laid on affordability, personal savings, self-help and cost recovery. Efforts would be made to enhance affordability of the disadvantaged and low-income groups, through provision of credit for income generation and income enhancement, housing loans at especially low interest, access to space for running workshops or business and such other facilities.
- Improvements and rehabilitation of the existing housing stock will be given priority by the Government alongside new housing.
- Encroachments on public land and formation of unauthorized constructions will be discouraged.
- Austerity will be maintained in building houses and efforts will be made to economize housing costs, discourage extravagant construction, facilitate incremental house building and ensure wider application of low cost technology and optimum use of resources at the individual and national levels both in public and private sectors.
- Regeneration of forest-based building materials would be planned and environmental conservation given due consideration.
- Due attention would be given to construction, protection, replacement and rehabilitation of shelter in disaster affected and fire prone areas.
- Special care would be taken for the preservation of cultural heritage and promotion of vernacular architecture in new housing projects.
- Universities, research institutes and centres will be encouraged to conduct research on housing issues.
- The National Housing Policy will be co-ordinated with other development policies e.g. land, environment, population, employment, social welfare, fiscal and monetary policies at national and local levels.

Population Policy, 2004

Realizing the importance of population and development, the government prepared a Population Policy in the year 1976 and identified population problem as a national problem. Objectives of the Population Policy are to improve the status of family planning, maternal and child health including reproductive health services and to improve the living standard of the people making a desirable balance between population and development in the context of Millennium Development Goals (MDGs) and Interim Poverty Reduction Strategy (IPRS). Economic growth, poverty reduction and social development has identified as national strategy through the Population Policy of 1976. In the Policy, urgent attention should be given on the gender equity and empowerment, welfare services for elderly and poor, control on rural to urban migration, human

resource development through skilled workforce and participation on NGOs and private sector in the process to control the population growth.

Aims

Aims of the Population Policy as presented are:

- Aware females about family planning to reduce Total Fertility Rate (TFR) and increase to use family planning devices among the fertile groups.
- Towards stable population within the year 2060 and the net growth rate not higher than 1% within the year 2010.
- Provide importance on mother's health to reduce maternal dead.
- To aware people about HIV / AIDS and to reduce it's chronological expansion.
- To help for providing gender equity and women empowerment in the society.
- To increase personal quality of the planners, administrators and service delivery agencies and to develop the information collection system, research and presentation.
- To control immigration from rural to urban and considers effective steps.
- Provisioning environmental sustainability including safe drinking water supply.

Agriculture Policy

Primary goal of the Agriculture Policy is to modernize and diversify the crop sector (including agricultural system) through initiation and implementation of a well-organized and well-coordinated Agriculture Development Plan. Overall objective of the Agriculture Policy is to make the nation self-sufficient in food increasing crop production (cereals also) and ensure a dependable food security system for all.

Aims

Clause 2 of the Agriculture Policy presents aims to increase crop production and maintain food security in the country. Some of those aims are:

- To increase income of the farmers and their buying capacity through stable and benefited agricultural development.
- To develop and preservation of productivity of the land.
- Removal of dependency on specific crop as a stable food.
- Introduces biological technologies, their use and expansion among the farmers.
- To encourage farmers for introducing irrigation from secondary sources during draught and introduces stable irrigation facilities for improving cropping intensity and crop production.
- Introduction of farming as an income generating sector through farming system and agro-forestry activities.
- To produce necessary agro-product for industrial use.

- To find out new opportunities for more export and minimum import of agriculture commodities.

Transportation Policy

For the country's economic and social development and for poverty alleviation, development of the road network is essential. For this reason the transport sector has been accepted as a priority sector. With the development of the economy the volume of vehicles, passengers and goods has been increasing. In the meantime a notification regarding classification, definition and responsible organizations for all roads was issued. In this context standardization and cost rationalization of the roads in the country, especially the Zila, Upazila, Union and village roads, have become very essential. For the development of Multimodal Transportation System (Road-Rail-River) such a standardization/ cost rationalization of roads and bridges / culverts is a need of the hour. Standardization including cost rationalization will provide the basis of appraisal of road / bridge projects leading to optimal development of the transport system as a whole. At present there is no standard design and national unit cost for construction and maintenance of various roads and bridges and culverts. As a result substantial cost difference has been proposed by the agencies for same type of road / bridges for the same area.

Summary of Issues Covered

Following tasks of a road projects will be adopted:

- The Committee reviewed the design standards for the Union, Upazila, Zila Roads, and concluded that the key design criteria for all roads should be traffic and axle loads, and not the classification of the roads.
- The six design standards agreed by the Committee to form a logical progression in terms of road width and pavement thickness, all based on traffic considerations. They are not directly related to road classification.
- The agreed design standards are to be used by all road agencies. Road agencies will be required to use appropriate standards for roads according to traffic criteria.
- Reconstruction- full pavement reconstruction on an existing embankment
- New road Construction - completely new embankment and road pavement, including bridges, culverts and any necessary slope protection. This is likely to prove a rare category of road project in Bangladesh
- Widening- road widening and upgrading, including full re-construction of the existing pavement
- Strengthening- removing existing road surfacing and providing a new base layer of Base Type-1 and surfacing.

A passenger car is 1.0 pcu. Larger vehicles have higher values. Conversion factors for vehicles to pcu's are shown in the following table.

Table 5.1: Passenger Car Unit (pcu) Conversion factors for non-urban roads

Vehicle Type	PCU factor	Vehicle Type	PCU factor
Car	1.0	Bicycle	0.3
Bus	3.0	Rickshaw	1.0
Truck	3.0	Motor Cycle	0.3
Autorickshaw	0.5	Tempo	1.0
		Bullock Cart	4.0

Source: Transport Research Laboratory (UK) Overseas Road Note 13.

Environment Policy

Bangladesh National Environment Policy was approved and published in 1992. Key elements of the Policy are:

- Maintain ecological balance and overall physical development progress of the country through protection and development of different sectors. Protection from natural disaster is one of them.
- Identification and regulation all type of activities which pollutes and degrade the environment.
- Ensuring proper Environment Impact Assessment prior to undertaking of industrial and other development projects.
- Ensuring sustainable use of natural resources.

Proposed Sectors

For the fulfillment of every component of Environment Policy, it has divided in to 15 sectors. Those sectors are – Agriculture, Industry, Health, Energy, Water Development, Flood Control and Irrigation, Land, Forest including flora and fauna, Fish and Livestock, Food, Seashore and Maritime, Transport and Communication, Housing and Urbanization, Population, Literacy and awareness, Science, Technology and Research, Legal framework and Institutional framework.

Strategies

For the implementation of policies, a large number of strategies have been framed according to the sector. Some of those strategies are:

Agriculture: Conduct field survey for imposing sustainable farming system and increase soil fertility. Necessary steps should be taken based on that survey. Control on the use of chemical insecticides and pesticides and encourage farmers using bio-chemical fertilizer. Such strategy may be implemented by the Agriculture Ministry, Bangladesh Agriculture Research Council, Directorate of Agriculture Extension, Bangladesh Rice Research Institute, Jute Research Institute, Bangladesh Agriculture Research Institute, Bangladesh Sugar and Food Industries Corporation.

Industry: The industries identified by the Directorate of Environment in the group of polluting industries, measures should be taken against them as early as possible. The strategy should be imposed by the Agriculture Ministry, Directorate of Forest, Commerce

Ministry, Controller of Export Import, Plant Protection Wing, Directorate of Agriculture Extension, Bangladesh Sugar and Food Industries Corporation.

Health: Pure drinking water supply and sanitary latrine in urban and rural areas should be introduced. Industrial and agricultural wastes which are harmful for the health should not be dumped in the river, pond, canal and ditches. This should be controlled through the imposition of appropriate regulations. Those strategies will be maintained by the Local Government Division, Directorate of Public Health Engineering, Paurashava Authority and Directorate of Environment.

Water Development, Flood Control and Irrigation: For the expansion of the project on Water Development, Flood Control and Irrigation, environmental audit is necessary. Based on that audit, environmental degradation areas will be identified and appropriate measures will be undertaken. Roads and Highways Department, Bangladesh Road Transport Authority, Directorate of Environment, Water Development, Flood Control and Irrigation Ministry and Bangladesh Water Development Board will responsible for implementation of those strategies.

Land: Landuse regulations should be prepared and their effective use will be confirmed for planned use of land. Land Ministry, Agriculture Ministry, Industrial and other relevant Ministries, Local Government Division, Works Ministry, Directorate of Forest and Zila Parishad will responsible for such strategies.

Industrial Policy

At first, in the year 1999, government of Bangladesh has approved and notified the Industrial Policy. Again, in the year 2005, Industrial Policy of Bangladesh was published by the government. Both the Policies are synonyms and foremost objective is to setup planned industries considering the domestic demand, prospect of exporting goods and discouraging unplanned industrial growth in the light of past experience.

Objectives

Objective of the industrial policy is –

- To expand the production-base of the economy by accelerating the level of industrial investment.
- To promote the private sector to lead the growth of industrial production and investment.
- To focus the role of the government as a facilitator in creating an enabling environment for expanding private investment.
- To permit public undertaking only in those industrial activities where public sector involvement is essential to facilitate the growth of the private sector and / or where there are overriding social concerns to be accommodated.
- To attract foreign direct investment in both export and domestic market-oriented industries to make up for the deficient domestic investment resources and to acquire evolving technology and gain access to export markets.

- To ensure rapid growth of industrial employment by encouraging investment in labour intensive manufacturing industries including investment in efficient small and cottage industries.
- To generate female employment in higher skill categories through special emphasis on skill development.
- To raise industrial productivity and to move progressively to higher value added products through skill and technology up gradation.
- To enhance operational efficiency in all remaining public manufacturing enterprises through appropriate management restructuring and pursuit of market-oriented policies.
- To diversify and rapidly increase export of manufactures.

Strategies

All regulatory barriers will be removed within the quickest possible lime to facilitate easy and rapid flow of domestic private and foreign direct investment. Appropriate legal framework will be put in place to protect both investor and consumer rights to ensure proper market operation and consequently, for lowering cost of doing business.

- There will be no discrimination between domestic and foreign investment. Due emphasis will be given to promotion of regional and sub-regional cooperation.
- Existing public sector enterprises will be progressively privatized and public industrial investment will be limited to only those cases where there is special need to complement private investment or where there is an overriding social and national objective to be achieved.
- The capital market will be developed and strengthened to mobilize domestic savings and to attract foreign investment.
- Development of the infrastructure including port facilities, energy, transport and communication and human resource development will receive high priority Private investment including "Build, Operate and Own" (BOO) and "Build Operate and Transfer" (BOT) methods will be particularly encouraged in these sectors.
- Intensive industrial zones development will be undertaken together with balanced geographical dispersal of the zones in areas with growing potential to the utilization of local resources as more infrastructural and other facilities are put in place.
- Consistent with the charter of World Trade Organization (WTO), protection to domestic industries from external competition will be rationalized.
- To retain the competitive edge of domestic products, wage increases will he linked to productivity trends, and appropriate labour laws will be put in place to ensure congenial industrial relations.

The industrial investment will be encouraged through tariff rationalization and (appropriate fiscal measures. The import and export policies will also be made supportive of and consistent with the Industrial Policy.

The Kaliakair Paurashava is agro-based urban area. To reduce poverty and generate employment opportunities, more efforts are needed to establish agro-based industries in the light of Industrial Policy, 2005. This effort will ensure protection and fair price of agro-products and employment opportunities for unemployed people. In order to create further employment opportunities beyond the agricultural sector, initiatives should be taken to setup small, medium and large industries across the country. A well organized linking among those industries in case of raw materials and supply of labour will be needed. If these types of industries setup in a planned way, unemployment rate will decline and poverty alleviation will be accelerated.

Health Policy

National Health Policy was approved and published by the government in the year 2000. Aim of the Health Policy is –

- To develop a system to ensure easy and availability of health services for the people living in urban and rural areas.
- To ensure optimum quality, acceptance and availability of primary health care including government medical services at the Upazila and Union level.
- To adopt satisfactory measures for ensuring improved maternal and child health at the Union level and install facilities for safe child delivery in each village.
- To improve overall reproductive health resources and services.
- To ensure the presence of full-time doctors, nurses and other officers / staffs, provide and maintain necessary equipment and supplies at each of the Upazila Health Complexes and Union Health and Family Welfare Centres.
- To formulate specific policies for medical colleges and private clinics, and to introduce appropriate laws and regulations for the control and management of such institutions including maintenance of service quality.
- To explore ways to make the family planning program more acceptable, easily available and effective among the extremely poor and low-income communities.
- To arrange special health services for mentally retarded, physical disabled and for elderly population.
- Strategies
- Some of the strategies of health policy are:
- The aim “health for all” will be implemented through awareness building strategies. Cost-effective procedures to deliver health services will be the prime consideration.

- A specific organization will perform responsibility for Epidemiological Surveillance to control the spread of epidemic dieses. Such concept will be included with different programs.

The services delivering by the health centers to the patient should be standard and a printed guideline on standard, monitoring and evaluation will be given to those health centers.

- A Health Services Reforms Body will be formed based on the Health and Population Sector Strategy. This Body will responsible for infrastructural reformation, employment, development planning and implementation of human resources relevant with the health activities and development of carrier of workforces.

National Urban Policy

National urban policy aims to strengthen the aspects of urbanization and at the same time effectively deal with its negative consequences in order to achieve sustainable urbanization. Diffusion of urbanization and rural-urban linkages is an important issue in this regard. There is need for decentralization of power from central to local government. The major objectives of national urban policy will aim to:

- Ensure regionally balanced urbanization through diffused development and hierarchically structured urban system.
- Facilitate economic development, employment generation, reduction of inequality and poverty eradication through appropriate regulatory frameworks and infrastructure provisions.
- Ensure optimum utilization of land resources and meet increased demand for housing and urban services through public-private partnerships.
- Protect, preserve and enhance urban environment, especially water bodies.
- Devolve authority at the local urban level and strengthen local governments through appropriate powers, resources and capabilities so that these can take effective responsibility for a wide range of planning, infrastructure provision, service delivery and regulatory functions.
- Involve all sectors of the community, in participatory decision-making and implementation processes.
- Ensure social justice and inclusion by measures designed to increase the security of poor people through their access to varied livelihood opportunities, secure tenure and basic affordable services.
- Take in to account, particular needs of women, men, children, youth, elderly and the disabled in developing policy responses and implementation.
- Assure health, safety and security of all citizens through multifaceted initiatives to reduce crime and violence.

- Protect, preserve and enhance the historical and cultural heritage of cities and enhance their aesthetic beauty.
- Develop and implement urban management strategies and governance arrangements for enhancing complementary roles of urban and rural areas in sustainable development.
- Ensure good governance by enhancing transparency and establishing accountability.

Rural Development Policy

From the year 1987 to 2011, government has framed and implemented different projects and programs for the betterment of rural people. Those projects and programs as mentioned in the Rural Development Policy of Bangladesh are:

- Food for Works Program (L¡-Sl ¢h¢ej-u M¡cÉ LjÑp§Q£)
- G.R Program (Gratuitous Relief Program)
- T.R Program (Test Relief Program)
- V.G.D Program (Vulnerable Group Development Program)
- V.G.F Program (Vulnerable Group Feeding Program)
- Single-House Single-Farm Program (HL¢V h¡s£ HL¢V M¡j¡l LjÑp§Q£)
- Back to home Program (O-l ®gl¡ LjÑp§Q£)
- Food for Education Program (M¡-cÉl ¢h¢ej-u ¢nr¡ LjÑp§Q£)
- Rural Occupational Project (fõ£ S£¢hL¡ue fËLÒf)
- Poverty Reduction Project (c¡¢lâ ¢h-j¡Qe fËLÒf)
- Self-employment Program for Women (j¢qm¡-cl BaÈ-LjÑpwØq¡e fËLÒf)
- Women Empowerment Program (j¢qm¡-cl p¡j¡¢SL rja¡ue fËLÒf)
- Coordinated Women Development Program (pj¢eÄa j¢qm¡ Eæue fËLÒf)
- Peace Home Program (n¡¢¿¹ ¢eh¡p LjÑp§Q£)
- Shelter Support Program (BnËue LjÑp§Q£)
- Educational Allowance Program (¢nr¡ Efhª¢š L¡kÑH²j)
- Aged-allowance Program (huØLi¡a¡ L¡kÑH²j)
- Micro-credit Program (r¥âGZ LjÑp§Q£)
- Allowances for Widowed, Poor and Husband-renouncement Women Program (¢hdh¡, c¤xØq J ü¡j£ f¢laÉJ²¡ j¢qm¡-cl SeÉ i¡a¡ fËc¡e LjÑp§Q£)

Aims and objectives

Some of the aims and objectives of the Rural Development Policy is presented here.

- To increase the income and provision of jobs for the Villagers, especially for women and people under low-living standard in the rural areas.
- To confirm sustainable economic and social development through poverty reduction.
- To encourage self-employment opportunities in the rural areas.

- To emphasize for the development of rural wealth according to the equal distribution of economy and national development as prescribed in the Constitution of Bangladesh.
- To give confirmation to the rural people about infrastructural development, equal distribution of wealth and marketing of the agricultural production.
- To produce technologically efficient people about education, technical education and trainings in rural areas.
- Identification of demand and their fulfillment for socio-economic development of rural poor, persons involved with the production, especially small farmers and landless people.
- To reduce distances between towns and villages about services prevail through collective efforts and develop gradually.

Programs

Programs for the rural development may be framed on Involvement of people with the decision-making and development activities, Poverty reduction, Rural infrastructural development, Agro-based rural economy, Rural educational system, Village health service and development of foodstuffs, Village population control, Development of village settlement, Landuse and development, Village industrial expansion, Increase of capital and financing, Women empowerment, Development of village child and youth, Development of village backward population, Area-based special development program, Self-employment for self-dependent, Cooperative system for rural development and Conservation of rural environment.

5.2 Laws and Regulations Related to -

5.2.1 Urban Development Control

For planned urban development the Local Government (Paurashava) Act, 2009 has made the provision of having a Master Plan prepared by a Paurashava within five years of its inception. The function of the Paurashava also includes that it ensures planned development following the rules of the ordinance. The President of Bangladesh is empowered through the Constitution (called constitutional Wright) to establish, control and removal of any government office. This is a part of national administration. The President of Pakistan, in the year 1960 was enacted the Municipal Administration Ordinance, 1960. In the year 1977, some of the Municipalities were upgraded and re-named as Paurashava and administered through the Paurashava Act, 1977. Again, in the year 2009, Paurashava Act, 1977 was re-named as Local Government (Paurashava) Act, 2009.

The Local Government (Paurashava) Act, 2009 was in acted in 6th October 2009 and this is the only regulation executes by the Paurashava authority. The Paurashava authority may provide the functions as prescribed in the Act, no provision is being outlined to control and manage those functions. The jurisdiction of this act on other regulations includes

following Acts and Ordinances. The Paurashava may enforce those regulations according to their capacity.

- A¡¢bÑL fË¢aù¡e A¡Ce, 1993 (1993 p-el 27 ew A¡Ce)
- AbÑ GZ A¡c¡ma A¡Ce, 2003 (2003 p-el 8ew A¡Ce)
- ÙÛ¡e£u plL¡l L¢jne AdÉ¡-cn, 2008
- h¡wm¡-cn nËj A¡Ce, 2006 (2006 p-el 42 ew A¡Ce)
- Cantonments Act, 1924 (Act No. II of 1924)
- District Act, 1836 (Act No. I of 1836)
- The Penal Code, 1890 (Act No. XLV of 1890);
- Prevention of Corruption Act, 1947 (Act No. II of 1947)
- hÉ¡wL ®L¡Çf¡e£ A¡Ce, 1991 (1991 p-el 14 ew A¡Ce)
- The Bangladesh Shilpa Rin Sangstha Order, 1972 (P.O. No. 128 of 1972)
- The Bangladesh Shilpa Bank Order, 1972 (P.O. No. 129 of 1972)
- The Bangladesh House Building Finance Corporation Order, 1973 (P.O. No. 17 of 1973)
- The Bangladesh Krishi Bank Order, 1973 (P.O. No. 27 of 1973)
- The Investment Corporation of Bangladesh Ordinance, 1976 (Ordinance No. XL of 1976)
- The Rajshahi Krishi Unnayan Bank Ordinance, 1986 (Ordinance No. LV III of 1986)
- ®L¡Çf¡e£ A¡Ce, 1994 (1994 p-el 18 ew A¡Ce)
- Local Government (Paurashava) Act, 2009 (Ordinance No. XLXVIII of 2009)
- Local Government (Paurashava) Ordinance, 2009 (Ordinance No. XLXVIII of 2009)
- SeÈ J jªa¤É ¢ehåe A¡Ce, 2004 (2004 p-el 29 ew A¡Ce) (see section 53(2)(Q)
- Evidence Act, 1872 (Act No. I of 1872) (see section 131)
- fö ®l¡N A¡Ce, 2005

On the other hand, the Paurashava is empowered for delivery urban services, collection of taxes and tolls, preparation of budget, control development and other physical activities provide health and social services and electoral role. All of those activities are guided through this Ordinance. In case of regulatory involvement, the Ordinance is wide enough than other authorities. The Ordinance proves that the Paurashava is independent and self regulatory body, but due to the absence of necessary manpower, technological support and government initiative in financial matter, the Paurashava is dependent on central government.

Building Construction Rules, 1996

Building Construction: The Paurashava Authority is the custodian and enforcement authority of the Building Construction Act, 1952 and Building Construction Rules, 1996 for any construction in the Paurashava premises. Section 3(1) of the Act presents control

on building construction in the country. Mostly approval system of the building plan prescribed in the Rules and punishment for the breach of regulation presented in the Act. But the approval system is lengthy and volume of punishment is poor.

Density Control: Section 12(1) of Building Construction Rules, 1996 sets a formula for building height determination based on the width of the front road. This rule imposes a limit on the building height as long as the front road is less than 75 ft. (22.87 meter). Indirectly this limits the number of family or the size of population in a building. Setback rule of the building and approval system of the building plan also prescribed in the Building Construction Rules.

Excavation of Tank: Section 3(2) of the Act presents control on the excavation of Tank in the urban area. Approval for such excavation will be needed from the concerned authority. The regulation mostly enforces by the Development Authority and the Deputy Commissioner enforces on the areas other than the jurisdiction of Development Authority.

Raging of Hill: Section 3(3) of the Act presents regulation on the raging of hill. In the Act it is prescribed that anybody is not authorized for raging of hill without approval from the concerned authority. Development Authority and Deputy Commissioner is the concerned authority.

National Reservoir Protection Act, 2000

"Play field, Open space, Park and Naural Water Reserviour Conservation Act, 2000"enacted in 18th September 2000. In short, this Act may be called as National Reservoir Protection Act 2000. The jurisdiction of this Act is covered Metropolitan City, Divisional and District level Cities and all urban areas including Paurashava area. Aim of the Act is to preserve play field, open space, park / garden and natural water reservoir. For the Paurashava premises, Paurashava Authority is empowered for enforcement of the said Act.

According to the section 5 of this Act, any area demarcated as Playfield, Open space, Garden and Natural Tank should not be changed with other use or it is prohibited for rent, leasing or any other procedure followed by, or handover to anybody for such changes. Again, according to the section 6, approval from concerned authority through application within stipulated time will be needed for any change of the area identified as play field, open space and natural tank. Punishment for such changes without approval from concerned authority is presented in the section 8. For such unlawful activities, punishment may be 5 years imprisonment or Tk 50,000 as a penalty or both. For preservation of natural water bodies in the Paurashava, this Act will be the important tool of the Paurashava authority.

Acquisition and Requisition of Immovable Property Ordinance, 1982

For any physical development activities, acquisition of land is needed primarily. In the Paurashava premises, for acquisition of land, the Paurashava Authority will request to the Deputy Commissioner to acquire the land needed. It is said in the section 3 of the

Acquisition and Requisition of Immovable Property Ordinance, 1982, whenever it appears to the Deputy Commissioner that any property in any locality is needed or is likely to be needed for any public purpose or in the public interest, he shall cause a notice to be published at convenient places on or near the property in the prescribed form and manner stating that the property is proposed to be acquired.

Brick Burning (Control) Ordinance, 1989

Chairman of the Upazila Parishad is the enforcement authority of the Brick Burning (Control) Ordinance, 1989. In this Ordinance, control imposes only on the brick burning and said that no person should use wood for such purposes (section 5). For the violation of this regulation, the accused person may be punished with 6 months imprisonment or punished with a fine Tk. 10,000 or with both.

Conservation of Environment Act, 1995

Directorate of Environment is the enforcement authority of the Conservation of Environment Act, 1995. According to the Act, government can declare ecologically critical area through Gazette Notification (section 5(1). Such critical environment may be created through human activities or climatic disturbances. Control on motorized vehicles who exhausts smoke dangerous for human health has prescribed in the section 6. Punishment for violation of any order presented in the Act may be 5 years imprisonment or fine with Tk. 1, 00, 000 or with both.

Rural Electrification Board Ordinance, 1977

Government of Bangladesh has enacted the Rural Electrification Board Ordinance on 29th October 1977. Section 8 of the Ordinance has presented functions of the Board and among them two functions are -

(a) To establish electricity generation transmission, transformation and distribution systems in the rural areas of Bangladesh.

(b) To take measures for effective use of electricity to foster rural development with special emphasis on increase of use of electric power for economic pursuits such as development of agriculture and establishment of rural industries and assisting the advantaged sections of the community for augmenting their income and standard of living.

Public Health (Emergency Provisions) Ordinance, 1944

Department of Public Health Engineering is the enforcement authority of the Public Health (Emergency Provisions) Ordinance, 1944. The Department is responsible for supply of drinking water also in the Paurashava premises. According to the section 7(1), “a local authority may supply water to any local authority or to any other authority or person within or without its local area upon such terms as may be agreed, notwithstanding any provision prohibiting or restricting such supply contained in any other law.” Based on such regulation, the Department is performing his duty in the Paurashavas.

Land Development for Private Housing Project Act, 2004

The Act was enacted on 1st March 2004 to control land under private housing and develop accordingly. The authority who has prepared master plan, the Act will be enforced on those areas. It is said in the section 1(2) of this Act that, this Act will be enforced under the jurisdiction of the master plan areas prepared under the guidance of The Town Improvement Act, 1953 and The Building Construction Act, 1952." According to the regulation prescribed above, the private housing construction in the Paurashava area may be controlled through this Act but, an amendment will be necessary to include the name of Paurashava Act, 2009 under which the Master Plan (Structure Plan, Urban Area Plan and Ward Action Plan) is being prepared.

5.2.2 Paurashava Development Management

After the independence (1971), all local government systems were abolished by the Presidential Order No. 7 in the year 1972 and appointed an administrator in each of the Municipality. After this Order, name of the Local Governments were changed as Town Panchayat instead of Union Committee, Shahar Committee instead of Town Committee and Paurashava instead of Municipal Committee. Shahar Committee was renamed as Paurashava in the year 1973 with a Presidential Order No. 22 and introduced election procedure for the Chairman and Vice-chairman. Thana Parishad Ordinance, 1976 (Ordinance No. XXXII of 1976) was enacted in 21st May 1976 to provide for the constitution of Thana Parishad. Paurashava Act, was enacted and notified in the year 1977. Nine Commissioner and selection of female Commissioner in every Paurashava was provisioned in the Ordinance. According to the Paurashava (amendment) Ordinance, 1998, re-distribution of Paurashava Wards was introduced and the Paurashava belongs with 3 Wards proposed for 9 Wards and 12 Wards instead of 4 Wards. One Commissioner for every Ward and one-third Ward of every Paurashava was reserved for female Commissioner who was elected by the general election of the country. Local Government (Paurashava) Ordinance, 2008 (Ordinance No. XVII of 2008) was provisioned one Mayor, 9 ward councillors and 3 female Councilors for every Paurashava. Mayor and Councilors will be elected through general election. The provision remains in the Local Government (Paurashava) Act, 2009.From the year 1977 to 2009, Paurashava Ordinance 1977 enforces by the Paurashava authority and the name of the statute was Paurashava Ordinance 1977. After promulgation of the same statute, name of the Ordinance has changed as Local Government (Paurashava) Act, 2009. Generally, people call it Paurashava Act, 2009.

For the management of all physical development activities, a wide range of functions have been prescribed in the Second Schedule of the Act. For efficient management of development, three major activities are prescribed and they are – Town Planning, Building Construction and Development. According to the Second Schedule, functions in brief are presented in the following table.

Table 5.2: Functions in brief prescribed in the Local Government (Paurashava) Act, 2009

Major activity	Specific functions	Functions in brief

Major activity	Specific functions	Functions in brief
Town planning	Master plan	The Paurashava shall draw up a master plan for the city which shall provide for a survey of the Paurashava including its history, statistics, public services and other prescribed particulars. Development, expansion and improvement of any area within the city; and restrictions; regulation and prohibitions to be imposed with regard to the development of sites, and the erection and re-erection of buildings within the Paurashava.
	Site development schemes	Where a master plan has been drawn up and approved by the government, no owner of lands exceeding such area as may be specified in this behalf in the master plan, shall develop the site or errect a building or any plot of land covered by the provisions of a site development scheme sactioned to area in the prescribed manner. Among other matters, a site development scheme may provide for- (a) the division of the site into plots; (b) the street, drains and open spaces to be provided; (c) the land to be reserved for public purposes and to be transferred to the Paurashava; (d) the land to be aquired by the Paurashava; (e) the price of plots; (f) the works that shall be excuted at the costof the owner or owners of the site or sites; and (g) the period during which the area shall be developed.
	Execution of Site Development chemes	If any area is developed or otherwise dealt with in contravention of the provisions of the sanctioned Site Development Scheme, the Paurashava may by notice require the owner of such area or the person who has contravened the provisions to make such alteration in the site may be specified in the notice as where such alteration is not made or for any reason cannot be carried out, the Paurashava may, in the prescribed manner require and enforce the demolition of the offending structure; and notwithstanding anything to the country contained in any law, no compensation shall be payable for such demolition.
Building construction	Building construction and re-construction	Without approval of the building site and plan by the Paurashava, nobody can construct, re-construct any building in the Paurashava area. The Paurashava will approve the plan within sixty days or refund it within that specified time frame; otherwise the plan will be considered as approved.
	Completion of construction and change, etc.	After completion of the approved building, the owner will notify to the Paurashava within 15 days. The Paurashava may inspect the building and if found any violation of the provision prescribed in the Master Plan or in the Site Development Scheme, the Paurashava may demolish the building and the demolishing cost may be incurred from the building owner.
	Building control	If any building or anything fixed thereon, be deemed by the Paurashava to be in a ruinous state or likely to fall or in any way dangerous to any inhabitant of such building or any neighboring building or to any occupier thereof or to passers-by, the Paurashava may be notice required the owner or occupier of such building to take such action in regard to the building as may be specified in the notice, and if there is default, the Paurashava may take the necessary steps itself and the cost incurred thereon by the Paurashava shall be deemed to be a tax levied on the owner

Major activity	Specific functions	Functions in brief
		or occupier of the building. If a building is in dangerous condition, or otherwise unfit for human habitation, the Paurashava may prohibit the occupation of such building till it has been suitable repaired to the satisfaction of the Paurashava.
Development	Development plans	The Paurashava shall prepare and implement development plans for specific time. Such Plans shall provide for- (a) the promotion, improvement and development of such function or functions of the Paurashava as may be specified; (b) the manner in which the plans shall be financed, executed, implemented and supervised; (c) the agency through which the plans shall be executed and implemented; and (d) such other matters as may be necessary.
	Community Development Projects	The Paurashava may, sponsor or promote community development projects for the Paurashava or any part thereof and may in this behalf perform such functions as may be prescribed.
	Commercial schemes	The Paurashava may, with the previous sanction of the Government, promote, administer, execute and implement schemes for undertaking any commercial or business enterprise.
Street	Public streets	The Paurashava shall provide and maintain such public street and other means of public commutation as may be necessary for the comfort and convenience of the inhabitants of the Paurashava and of the visitors thereto.
	Streets	No new street shall be laid out except with the previous sanction of the Paurashava. The Paurashava may by notice required that any street may be paved, matalled, drained, channeled, improved or lighted in such manner as may be specified in the notice, and in the event of default, the Paurashava may have the necessary work done through its agency, and the cost incurred thereon by the Paurashava shall be deemed to be a tax levied on the person concerned.
	General provisions about streets	The Paurashava may assign names to streets and paint the names or fix the nameplates on or at conspicuous places at or near the end corner or entrance of the street. No person shall destroy, deface or in any way injure any street, name or name plate, or without the previous permission of the Paurashava, remove the same.
	Street lighting	The Paurashava shall take such measures as may be necessary for the proper lighting of the public streets and other public places vesting in the Paurashava.
	Street watering	The Paurashava shall take such measures as may be necessary for the watering of public streets for the comfort and convenience of the public, and for this purpose, maintain such vehicles, staff and other apparatus necessary.
	Traffic control	The Paurashava shall make such arrangements for the control and regulation of traffic necessary to prevent danger and ensure the safety, convenience and comfort of the public.
	Public vehicles	No person shall keep or let for hire or drive or propel within the limits of the Paurashava any public vehicle other than a motor vehicle except under a license granted by the Paurashava, and in conformity with the conditions of such license. No horse or other animal shall be used for drawing a public vehicle within the limits of the Paurashava except under a license granted by the

Major activity	Specific functions	Functions in brief
		Paurashava.
Water supply and drainage	Water supply	The Paurashava may provide supply of wholesome water sufficient for public and private purposes. Frame and execute water supply scheme for the construction and maintenance of such works for storage and distribution of water.
	Private sources of water supply	All private sources of water supply within the Paurashava shall be subject to control, regulation and inspection by the Paurashava. No new well, water pump or any other source of water for drinking purposes shall be dug, constructed or provided except with the sanction of the Paurashava.
	Drainage	The Paurashava shall provide an adequate system of public drains in the and all such drains shall be constructed, maintained, kept, cleared and emptied with due regard to the heal and convenience of the public. All private drains shall be subject to control, regulation and inspection by the Paurashava
	Drainage scheme	The Paurashava may prepare a drainage scheme in the prescribed manner of the construction of drains at public and private expense. The drainage scheme as approved by the government shall be executed and implemented within specified period.
	Bathing and washing place	The Paurashava may from time to time set a suitable place for use by the public for bathing, washing cloths, or for drying cloth. Specify the time at which and the sex of persons by whom such places may be used. No person shall establish, maintain or run a bath for public use except under a license granted by the Paurashava.
	Dhobi ghat and washer men	The Paurashava may provide dhobi ghats for the exercise of their calling by washer men, and may regulate the use of dhobi ghats and levy fees for their use.
	Public water-course	The Paurashava may declare any source of water, spring, river, tank, pond, or public stream, or any part thereof within the Paurashava, which is not private property, to be a public watercourse.
	Public ferries	The Paurashava may by by-laws provide for the licensing of boats and other vassals plying for hire in a public water-course to be a public ferry and may entrust the management thereof to the Paurashava, and there upon the Paurashava shall manage and operate the public ferry in such manner and levy such tolls as prescribed.
	Public fisheries	The Paurashava may declare any public watercourse as a public fishery, and there upon the right of fishing in such water course shall vest in the Paurashava which may exercise such right in such manner as may be prescribed.

5.3 Strength and Weaknesses of the Existing Policies

The Consultant has identified following weaknesses in the existing policies. These are – accommodation of future thrust of growth, supply of safe drinking water, providing safe and easy accessibility, use of agriculture production in income generating activities and create provision for further investment.

The primary motive is to exercise control over unorganized development and promotion of planned infrastructure development to accommodate future urban growth. The Paurashava will be developed as a self-contained town in rural environs.

Many factors are involved with this such as landuse change, increase of commuters, increase of vehicular movement, forward linkage of commodities and social changes of the Paurashava dwellers.

To increase the agro-product and use them in income generating activities, a vast agriculture land will be used and at the sametime, the existing agriculture land should be preserved. Further residential expansion should be controlled through the imposition of development control. In this context, concept of cluster development and compact township approach should be provisioned in the plan. Vertical development will be encouraged rather than horizontal to save the agriculture land.

CHAPTER-6

PROJECTION OF FUTURE GROWTH BY 2031

6.1 Introduction

The Chapter presents future growth of the Paurashava according to the population, economy and landuse. The projected period for those components has been considered for the year 2010 to 2031. In case of population and landuse, projection has been presented but in case of economy, opportunities have been considered. For the Kaliakair Paurashava, government policy is the prime focus as economic opportunity but that is not considered here. Existing local economic strength considers as the basis of economic opportunity. Agriculture, fish, livestock and poultry, local fruits and availability of labour force considers as a basic components of the economic opportunities.

6.2 Projection of Population

In case of Kaliakair Paurashava the urban population was 157158 in 2011 but the Paurashava population was not found in 2001 BBS. Accourding to population cencus 2011 the annual population growth rate of Kaliakair Upazila is 6.02%.

Table 6.1: Urban Population of Kaliakair Paurashava 2011

Items	2011	Growth Rate	
		Decadal	Annual
Both sexes	157158	60.2	6.02
Male	83527		
Female	73635		

Source: Population census-2011, Community Series and Consultants' Analysis

Basis of population projection: Determination of Rate of Population Growth of Kaliakair Paurashava Area: The rate of migration is very important element for determining the rate of growth of urban population. The rate of growth is determined by adding migration rate with natural growth rate.

The rate of population growth of Kaliakair Upazila Area is 6.02 percent. After construction of Jamuna Bridge the population growth rate of this area became very high but presently it became normal.Considering the present condition and trend of development of this area and national urban growth rate,the planning team has considered the potential growth ratefor this area 4.02 percent.

F = A (1+r)^n

F=Projected population

A=Current population

R=Growth Rate

N=Year

The population is projected here by considering the annual growth rate 4.02. The projection shows that the population of the study area will be 37266 in 2016, 43433 in 2021, 50620 in 2026 and 58997 in 2031. The scenario proves that in next 20 years the Paurashava population will increase in a large number and it may be doubled. The projection is showing accepted estimation of population growth. Because of rapid expansion and population explosion in Dhaka City and huge traffic jam have already made it a functionally disabled city. Besides initiation and extension of mass transport system like Bus for Rapid Transit (BRT), Metro Rail etc, government policy on relocation of industries from Dhaka City to near outside and community facilities provided by the Paurashava according to the Master Plan; the people will prefer to stay in the Paurashava rather than coming to Dhaka and the growth in the Paurashava will be increased enormously rather than the normal rate at present.

Table 6.2: Population Projection of Kaliakair Paurashava (growth rate: 4.02%)

Ward No.	Area (sq.km)	Population 2011	Projected Population			
			2016	**2021**	**2026**	**2031**
1	1.74	9476	11536	14045	17098	20816
2	3.71	5659	6889	8387	10211	12431
3	3.41	7552	9194	11193	13627	16590
4	2.67	1724	2099	2555	3111	3787
5	2.14	10123	12324	15004	18266	22238
6	3.25	5722	6966	8481	10325	12570
7	6.05	62627	76244	92822	113005	137576
8	1.67	27389	33344	40594	49421	60167
9	2.64	27958	34037	41438	50448	61417
Total	**27.28**	**157158**	**191329**	**232931**	**283577**	**345237**

Source: BBS Population Cencus-2011 (Community Series, Zila: Gazipur) and Consultants' Analysis.

6.3 Identification of Future Economic Opportunities

Different types of industry are located in the Kaliakair Paurashava area. Good communication and huge agro based product are influencing for such type of industry. The productions are mostly used in the Dhaka City and Mymensingh Zila. Investment in this field will bring huge prospects of the Paurashava. Other economic prospect summarizes in the following discussions:

Availability of agriculture land. The land may be used for different agricultural production and those productions may be used for the input of agro-based industries.

Availability of unskilled and cheap manpower.

Due to the nearness of Dhaka City, the Paurashava may be developed as the fringe area of Dhaka City. This fringe area with its agriculture production will support to the Dhaka City where marketing for those productions are available such as railway and National Highway network.

The Paurashava has been developed as a linier city. multiple cluster development is found in the Paurashava area. Through this master plan, planned development will initiate to linear city development concept in a systematic manner. At the sametime,

economic development parallel to the physical and social development will be encouraged.

6.4 Projection of Landuse

Landuse requirement

A major portion of the land of this Paurashava is agricultural land. There are also a large numbers of industries are seen in this Paurashava. Agriculture and manufacturing based township can be encouraged in the preparation of Master Plan. Growth of population is the natural trend and at the sametime, expansion of non-agricultural use on agriculture land is also natural tendency of the people. This will be controlled through the Compact Township concept with the encouragement of vertical development. In case of government services, specific building may accommodate different type of offices.

Future landuse will be calculated according to the development control for the masses and the standard supplied by the LGED. In case of public land, existing use and khas land will be emphasized. Willingness and participation of the people in development activities will be the key factor for future landuse demarcation. Slow change of landuse will be emphasized rather than rapid change. Let the people do whatever he likes on own land – such concept should not be considered for future projection of landuses. Three parts of the projection are landuse change, landuse control and landuse restriction will be included in the Master Plan. In any case, river front areas should be restricted for human habitation. As a result, river water will safe from contamination.

In case of landuse change, the standard given by the LGED according to the projected population and area for the specific service will be calculated. But, the agriculture land should be preserved from any type of physical development. It should not be decreased. The vertical expansion will be emphasized rather than horizontal. In case of road network planning, missing links will be prescribed rather than new roads. For the development of pisciculture, all ponds and ditches may be preserved, in some exceptional cases; small number of ditches may be used for physical development activities. Landuse control and landuse restriction will be imposed by the Paurashava according to the prescribed plan.

People's willingness will be considered as important base for the projection because the Master Plan is for the inhabitants of the Paurashava. They will be the beneficiary group of that Master Plan. Their willingness in case of use and land allocation, location, expansion provision will be the important consideration. On the basis of fulfillment of their demand, they will like to involve them willingly in the implementation procedure of the Master Plan.

Demand Analysis

The projection of landuse depends on the growth of population. After population projection it is found that, population of this area will be 157158 (according to the linear method) that belong to the trend line method in the year 2031. In case of landuse change, the standard given by the LGED according to the projected population and area for the specific service will be calculated. But, the agriculture land should be preserved

from any type of physical development. It should not be decreased. The vertical expansion will be emphasized rather than horizontal. In case of road network planning, missing links will be prescribed rather than new roads. For the development of pisciculture, all ponds and ditches may be preserved, in some exceptional cases; small number of ditches may be used for physical development activities. Landuse control and landuse restriction will be imposed by the Paurashava according to the prescribed plan.

Table 6.3: Standard of Landuse and future need

Types of Land Uses	Recommended Standard	Existing (acre)	Future land requirement			
			2016	2021	2026	2031
Residential		1634.37	1275.53	1552.87	1890.53	2301.58
General residential	150 persons/1 acre	-	1275.53	1552.87	1890.53	2301.59
Real Estate – Public/Private	200 population/ 1 acre	-	-	-	-	-
Roads		201.10	-	-	-	-
Paurashava primary roads	150 – 100 feet	-	-	-	-	-
Paurashava secondary roads	100 – 60 feet	-	-	-	-	-
Paurashava local roads	40 - 20 feet	-	-	-	-	-
Education		43.35	296.99	361.57	440.19	535.90
Nursery	0.5 acre/10,000 population	-	19.13	23.29	28.36	34.52
Primary School/ kindergarten	2.00 acres/5000 population	-	76.53	93.17	113.43	138.10
Secondary/High School	5.00 acres /20,000 population	-	47.83	58.23	70.89	86.31
College	10.00 acres/20,000 population	-	95.66	116.47	141.79	172.62
Vocational Training Centre	5 - 10 acres / Upazila	-	10.00	12.17	14.82	18.04
Other	5.00 acres / 20,000 population	-	47.83	58.23	70.89	86.31
Open Space		2.72	421.36	512.97	624.52	760.31
Stadium/sports complex	5 – 10 acres/Upazila HQ	-	10.00	12.17	14.82	18.04
Play field/ground	3.00 acres/20,000 population	-	28.70	34.94	42.54	51.79
Park	1.00 acre /1000 population	-	191.33	232.93	283.58	345.24
Neighborhood park	1.00 acre /1000 population	-	191.33	232.93	283.58	345.24
Recreational		12.48	9.57	11.65	14.18	17.26
Cinema/ Theatre	1.0 acre /20,000 population	-	9.57	11.65	14.18	17.26
Health		7.00	48.27	56.59	66.72	79.05
Upazila health complex/ hospital	10 -20 acres/Upazila HQ	-	10.00	10.00	10.00	10.00
health centre/Maternity clinic	1.00 acre/ 5,000 population	-	38.27	46.59	56.72	69.05
Community Facilities		9.99	53.33	64.93	79.05	96.23
Mosque/Church/Temple	0.5 acre /20,000 population	-	4.78	5.82	7.09	8.63
Eidgah/	1.0 acre/20,000 population	-	9.57	11.65	14.18	17.26
Graveyard	1.00 acre /20,000 population	-	9.57	11.65	14.18	17.26
Community centre	1.00 acre /20,000 population	-	9.57	11.65	14.18	17.26
Police Station	3 – 5 acres/Upazila HQ	-	5.00	6.09	7.41	9.02
Police Box/outpost	0.5 acre/ per box	-	0.50	0.61	0.74	0.90

Types of Land Uses	Recommended Standard	Existing (acre)	Future land requirement			
			2016	2021	2026	2031
Fire Station	1.00 acre/ 20,000 population	-	9.57	11.65	14.18	17.26
Post office	0.5 acre /20,000 population	-	4.78	5.82	7.09	8.63
Utility Facilities		0.53	48.27	56.35	66.72	79.04
Water supply	1.00 acre/ 20,000 population	0.00	9.57	11.57	14.18	17.26
Gas Station	1.00 acre/ 20,000 population	0	9.57	11.57	14.18	17.26
Solid waste disposal	4-10 acres/ Upazila HQ	0.12	10.00	10.00	10.00	10.00
Waste transfer station	0.25 acres/ per transfer station	0	0	0	0	0
Electric sub-station	1.00 acre/ 20,000 population	0.18	9.57	11.57	14.18	17.26
Telephone exchange	.5 acre/ 20,000 population	0.10	4.78	5.82	7.09	8.63
Fuel station	.5 acre/ 20,000 population	0.13	4.78	5.82	7.09	8.63
Slaugther House	As per requirement	-	-	-	-	-
Public toilet	As per requirement	-	-	-	-	-
Others	As per requirement	-	-	-	-	-
Commerce and Shopping		111.59	210.46	256.22	311.94	379.76
Wholesale market	1.0 acres/ 10000 population	-	19.13	23.29	28.36	34.52
Retail sale market	1.0 acres/ 1000 population	-	191.33	232.93	283.58	345.24
Corner shops	0.25 acre/per corner shop	-	0.00	0.00	0.00	0.00
Neighborhood market	1.00 acre/per neighborhood market	-	0.00	0.00	0.00	0.00
Super Market	1.50 – 2.50 acres/per super market	-	0.00	0.00	0.00	0.00
Industry		772.56	478.32	582.33	708.95	863.10
Small scale	1.50 acres /1000 population		286.99	349.40	425.37	517.86
Cottage/agro-based	1.00 acres /1000 population		191.33	232.93	283.58	345.24
Transportation		8.45	28.42	34.59	42.12	51.27
Bus terminal	1.0 acre /20,000 population	-	9.57	11.65	14.18	17.26
Truck terminal	0.50 acre /20,000 population	-	4.78	5.82	7.09	8.63
Launch/steamer terminal	1.00 acre /20,000 population	-	9.57	11.65	14.18	17.26
Railway station	4.00 acre / per Station	-	4.00	4.87	5.93	7.22
Rickshaw/van stand	0.25 acre /one baby taxi/tempo stand	-	0.25	0.30	0.37	0.45
Passenger Shed	0.25 acre /one baby taxi/tempo stand	-	0.25	0.30	0.37	0.45
Administration		15.99	30.00	30.00	30.00	30.00
Upazila complex	15.00 acres	-	15.00	15.00	15.00	15.00
Paurashava office	3 – 5 acres	-	5.00	5.00	5.00	5.00
Jail/Sub-Jail	10 acres/Upazila HQ	-	10.00	10.00	10.00	10.00

Source: LGED and Consultants' Analysis

6.5 Housing

Housing areas in the Paurashava is the composition of an admixer of housing types. Mixed residential, poor dominated rural houses and semi-urban homesteads are found. Most housing areas have developed in a spontaneous fashion. In the rural part of the Paurashava, with its rural-agricultural character, has a different housing type. Population density is very high in this Pourashva In Kaliakair Paurashava in total there are 20016 structures and among these 83.29% are residential of which 68.35% residential structures are katcha, 25.24% are semi-pucca and the remaining 6.40% are pucca. Owners of the buildings have been found violated the setback rule by the construction. Except labor charge there is very little variation in building construction cost between Dhaka and Kaliakair Paurashava. Besides the natural growth rate high rural urban migration rate is creating problem in housing sector. In the central part there is informal housing on the abandoned land of absentee land lord. These housing are required to be formalized. Problems relating to the housing are mostly concerned with the poor community. Apart from dwelling, pure water and transportation are real problems for the inhabitants. Municipal services are highly inadequate. Drainage is major problem in rural part of the Paurashava. The Paurashava can not solve the problems due to scarcity of fund.

For effective promotion of housing the government should change its role to a facilitator instead of a provider. Government agencies should provide infrastructure and finance on soft terms and the rest should be left with the private sector. Currently private developers investment shows the future potentiality of housing sector development. There is a great demand for rental housing in Paurashava area. Since it is very close to Dhaka city people are interested to reside and commute to their work place in Dhaka regularly. Small and large industries can provide housing for their employee which can contribute to an extent in the housing sector.

Basis of housing projection

Existing landuse is the only basis for housing projection. Residential use and mixed-use has considered for the year 2011 as base year and projected housing area is calculated considering 100 persons per acre and there is no standard for industrial use, commercial use, etc.

Demand analysis

Ward No.	Area (sq. km)	Ward wise Population	Density /sq. km
1	1.74	9478	5447
2	3.71	5659	1525
3	3.41	7552	2215
4	2.67	1724	646
5	2.14	10123	4730
6	3.25	5722	1761
7	6.05	62627	10352
8	1.67	27389	16401
9	2.64	27958	10590
Total	27.28	157158	5761

Source: BBS Population Cencus-2011 (Community Series, Zila:Gazipur) and land use survey 2009

Population Density

In the Kaliakair Paurashava, the average density was 5761 persons per sq.km according to the Population Census, 2011. Ward no-8 was found to have the highest density of 16401 persons per sq. km while the lowest density was found in ward no-4 consisting of 646 persons per sq. km.

It is estimated that housing demand stands at **2301.58** acres at the end of project period 2031. The estimation is based on the assumption that the standard is supplied by the LGED for housing estimation where density is declared around 150 persons per acre. Kaliakair Paurashava is potential area to attain such high density because of its development pressure. In the Kaliakair Paurashava, the average density was 5761 persons per sq.km according to the Population Census, 2011. Ward no-8 was found to have the highest density of 16401 persons per sq. km while the lowest density was found in ward no-4 consisting of 646 persons per sq. km.. It is also observed that in the Paurashava new development is taking part mostly vertical rather than the horizontal expansion. Considering all these above facts, Ward wise projected housing area is shown in Table 6.4.

Table 6.4: Ward wise housing demand (in acre)

Ward No.	Existing housing areas (acres)	Estimated housing demand(acre)			
	2011	2016	2021	2026	2031
1	127.03	76.91	93.63	113.99	138.77
2	164.00	45.93	55.91	68.07	82.87
3	165.73	61.29	74.62	90.85	110.60
4	57.48	13.99	17.03	20.74	25.25
5	123.42	82.16	100.03	121.77	148.25
6	184.00	46.44	56.54	68.83	83.80
7	501.08	508.29	618.81	753.37	917.17
8	165.79	222.29	270.63	329.47	401.11
9	164.54	226.91	276.25	336.32	409.45
Total	1,653.05	1275.53	1552.87	1890.51	2301.58

Source: Land use survey 2010 and calculated by the consultant

Map 6-1: Population Density of the Study Area.

CHAPTER-7

LAND USE ZONING POLICIES AND DEVELOPMENT STRATEGIES

This chapter sets land use policies and development strategies for planning area. It classifies the Structure Plan area into categories and also includes strategies for optimum use of urban land resources, plans for new area development and areas for conservation and protection.

7.1 Zone of Structure Plan Area

To guide long term growth within the Structure Plan Area by means of demarcation of the future growth areas and indication of potential locations of major development zones are broadly classified into seven categories. Table 8.1 shows the Structure Plan area zones, its area and percentage coverage. Details of the description of structure planning zones are given in the following paragraphs.

7.1.1 Core Area

Total 837.57acres of land, which covers 12.43% of Structure Plan area, is declared as Core Area. It includes major potion of ward 1, 2 and ward 3. It is mainly the highest concentration of service area for an example upazila complex, schools, post office, police station, bazar area etc. and it has the highest potentiality of development. Because the town developed based on the major roads namely Hospital road, Kaliakair bazaar road, College road, Thana road, Garail road and Paurashava road are the major secondary roads of the Paurashava.. Within this area, there are differences in levels of provision, particularly between the formally developed and planned areas and the majority of unplanned areas. Levels of provision should be maintained in the planned areas. Since these areas are forecasted to show density increase and increased demand and therefore will require regular upgrading. The main thrust to improve services should be in the unplanned zones, particularly where the deficiencies already are great and quality of life will sharply decline when the services also haveto cater for the additional population.

7.1.2 Fringe Area

A total of 2326.96 acres of land covering 34.53% of Structure Plan area is declared as Fringe Area. Maximum fringe area of proposed structure plan is located at Ward 1,5,7,8 and 9. This area mainly proposed, where a slow trend of urbanization is continuing in unplanned manner. The area is identified in the Structure Plan as the likely choice for new urban development beyond the core area. Ideally, it might be reasonable to provide primary infrastructure networks in this area to foster development encouraging a more rapid urbanization in a planned way.

7.1.3 Peripheral Area

A small portion of land are within this category. A total of 217.49 acres of area, which covers 3.23% of Structure Plan area, is declared as Urban Peripheral Area which maily is located at the Ward no 1,2 and 4 of the Paurashava. This zone is developing areas that will take a longer time to reach the population densities of the urban core area. Low

initial densities in these areas do not justify supply of a full range of services as they will initially be underused. However, it is essential that planning and reservation of rights of way, at least for primary networks, be undertaken soon to enable provision when justified by increased density levels and allowed by resources.

Map 7-1: Structure Plan of Kaliakair Paurashava

Table 7.1: Structure Plan Policy Zoning

Zoning	Description of the Zone	Area (acre)	%
Core Area	This area is also known as built-up area. This is defined as the area which has the highest concentration of services; it also has the highest population concentration and density. It will absorb most population growth during the Land use Plan (2011-2021) period.	837.57	12.43
Fringe Area	This zone is developing areas which will take further decades to reach the population densities of the urban core area. Low initial densities in these areas do not justify supply of a full range of services as they will initially be underused. However, it is essential that planning and reservation of rights of way, at least for primary networks, be undertaken soon to enable provision when justified by increased density levels and allowed by resources.	2326.96	34.53
Peripheral Area	This is the zone where a slow trend of urbanization is continuing in unplanned manner. The area identified in the Structure Plan as the likely choice for new urban development beyond the core area. Ideally, it might be reasonable to provide primary infrastructure networks in this area to foster development and encouraged to enable a more rapid urbanization in a planned way.	217.49	3.23
New Urban Area	This zone will be the required additional area for future planned urban development as per population projection. New facilities and services like road, drains, footpath, waste transfer station and other civic services will be provided. This area is proposed to grow within 2031.	697.36	10.35
Agriculture	Agricultural land (also *agricultural area*) denotes the land suitable for agricultural production, both crops and livestock. It is one of the main resources in agriculture. The land under annual crops, such as cereals, other technical crops, potatoes, vegetables, and melons; also includes land left temporarily fallow; land under permanent crops (e.g., fruit plantations); areas for natural grasses and grazing of livestock.	394.65	5.86
Forest	Forest land is a large area covered chiefly with trees and undergrowth.	1292.80	19.18
Water body	Water body containing an area equals to or more than 0.3 acres excluding those of khal, irrigation canal and river will be treated as this category.	457.30	6.79
Circulation Network	It covers all the major roads within the structure plan areas.	514.84	7.64
Total		6,738.96	100

7.1.4 New Urban Area

Total 697.36 acres of land covering 10.35% of Structure Plan area is declared as New Urban Area. New urban area mainly proposed northern portion of the Paurashava. Most of the new urban lands will be use to meet the extra pressure of development trend for

this reason. A large portion of land will be used to establish industry (High tech. IT Park) and rest of the land will be used for future planned urban development as per population projection.

7.1.5 Agriculture

Total 394.65 acres of land covering 5.86% of Structure Plan area is declared as Agriculture Area.

7.1.6 Forest

Total 1292.80 acres of land covering 19.18% of Structure Plan area is declared as forest Area. A major portion of ward 4, 5, 6 and 7 declared as forest area.

7.1.7 Waterbody

Total 457.30 acres of land covering 6.79% of Structure Plan area is declared as Agriculture Area. It includes ponds and ditches with an area equal to or more than 0.3 acres and river within the Paurashava.

7.1.8 Major Circulation Network

It contains Regional Highway passes over the paurashava area , road network with other neighboring urban centers and also includes the major road way network required for maintaining existing internal communication. Total 514.84 acres of land which covers 7.64% of total structure plan area.

7.2 Strategies for optimum use of Urban Land Resources

7.2.1 Optimum use of Urban Land Resources

With a limited land mass, Bangladesh is the most densely populated country in the world. The land area of the country remains static amid continuously increasing population. Such a situation calls for strict regulation to utilize its scarce land resources for non-agricultural purposes. Increase in urban population means more demand for houses, roads, schools, hospitals, factories, bazars, shops, business centres, offices, other service facilities etc. Providing all these facilities require land and that is at the cost of valuable agricultural land, as the country has hardly any fallow land to accommodate all these land uses. Kaliakair Paurashava is surrounded by valuable fertile agricultural land. Any urban expansion will cost net deduction of agricultural land that will consequently affect local food and cash crop production. Practice of thriftiness on land utilization is, therefore, essentially needed in plans and development proposals. Such practice should start through adoption of conservative and rational standards of space use and their proper application in planning, designing and development.Table 8.2 shows the optimum use of urban land resources.

Table 7.2: Policy for optimum use of urban land resources

Policy	Justification	Means of Implementation	Implementing Agency
Policy UA/1: Optimization of	Keeping large land areas vacant within the	Control: Imposition of tax on the land	-Kaliakair Paurashava;

Policy	Justification	Means of Implementation	Implementing Agency
Available Land Resources Growth within the established urban area is not compact in Kaliakair. There are still large amount of land lying vacant amid all categories of land uses within the Paurashava area and beyond. Infilling of these lands should be promoted and encouraged to optimize use of land.	existing built up area, extension of physical boundary of the town is not logical. Such a tendency might cause valuable agricultural land out of use. There is a need to economize the use of land, which is a scarce resource against an expanding population in the country.	remaining vacant for a long time can be tried to discourage peculation on the land use practices. Measures should be adopted to minimize the use of land by public sector agencies. Policies to discourage large scale land acquisition for development by the public sector can be tried. Promotion: The public sector should develop infrastructure facilities and services in deprived areas to enable the land owners for development.	-Ministry of Land
Policy UA/2: Utilisation of Khas Land for Urban Development	Khas lands are public land that should be made best use for community purpose. Instead of evicting people from their own land for implementing development proposals, khas land should be used as much as possible.	Taking over of khas land by Paurashava that falls under different development proposals under the current development plan. Paurashava can later on hand over the land to the concerned authority that will implement the particular development proposals.	-Kaliakair Paurashava -Ministry of Land -DC, Dhaka

7.2.2 Plans for New Area Development

Table 8.3 shows policy to develop new urban area. It includes justification of new area development, means of implementation and agencies for implementation.

Table 7.3: Policy for new area development

Policy	Justification	Means of Implementation	Implementing Agency
Policy UA/3: Initiatives For New Urban Area Development	New areas with their growing stage offer excellent opportunity for organized d development with little or no compensation cost for eviction and less hindrances in motivation of the local residents in favor of organized development	Participatory approach to new urban area development is to be supported by innovative ideas of spatial development. Long motivational activities will have to be carried out for this purpose. Public sector with technical and financial support of the private sector and cooperation from service giving agencies will make the task easier.	-Kaliakair Paurashava -DPHE -Private sector.

7.2.3 Areas for Conservation and Protection

To ensure livable environment in the planning area, different areas are conserved in various forms, namely agricultural land, low land, pond and natural drainage, green belt, historic and heritage areas, etc. Details are given in Table 7.4.

Table 7.4: Area for conservation and protection

Type of Land	Means of Implementation	Implementing Agency
The historical areas: As this a historical area, the Panam city area, museum area and other historical area with the Paurashava should preserve.	As per esisting rules and regulation of Department of Arciology of Bangladesh.	-Department of Arciology of Bangladesh. -Bangladesh parjatan Corporation. -Kaliakair Paurashava
Loss of Productive Agricultural Land: The Master Plan area has a vast agricultural land in the northern side of this project. After implementation of the project, environment of agriculture will be converted into non-productive urban and semi-urban area.	The EIA Guidelines of DOE emphasized on the avoidance of productive agricultural land for any development project. Therefore, it will be wise to consider more economical use of land to avoid fertile lands. The town expansion and land acquisition should be based on the growth rate of population. According to population projection for the year 2031, the present residential land use area will grow with increasing density. So a large share of agricultural land can be spared at least for the time being.	-Kaliakair Paurashava -DOE.
Low Land, Pond and Drainage Path: Pond and ditches with an area equal to or more than 0.3 acres within the Paurashava are declared as retention area. In no way permission for filling up of these ponds should be given. Paurashava should acquire these ponds at suitable time to use them for retention and emergency use.	This area is declared as water body in the Master Plan. As per the guideline of "Play field, Open space, Park and Naural Water Reserviour Conservation Act, 2000" this area will be conserved as water body. According to population projection for the year 2031, the present residential land use area can be developed with increasing density up to this year. So a large share of water body can be spared.	-Kaliakair Paurashava -Water Development Board
Green Belt: The river bank is declared as green belt. This area will be used for aforestation and recreational purposes for conservation of environment and creation of opportunity for tourism development in this town.	This area is declared as green belt in the Master Plan.	-Kaliakair Paurashava

7.3 Policies for Development

This section of the chapter sets forth strategies and policies for various components of the Master Plan on sectoral basis.

7.3.1 Policies for Socio-economic Sector

Population

Controlling population should be given utmost importance nationally, as because of the uninterrupted population growth, the country's economic problems are being accentuated, pressing on its resources. It makes poverty reduction difficult, which is the key to overall national development. It is, therefore, necessary to enhance population control drive. The people at the grassroots can play an effective role in this regard. An efficient, well trained and well paid grassroots level work force can help profoundly in achieving the targets of population control policy of the government. Side by side, promotion of education can be very effective in the creation of awareness about small family size. The Paurashava may undertake relevant measures in line with national objectives to strengthen its own position in population planning.

Strategy:

Raise the level of education among mass people and emphasize more on grassroots level family planning workers' services with effective delivery of birth control services.

Table 7.5: Policy for Population Sector

Policy	Executing Agency
Popu/1: Declaring population as one of the most critical sectors of national development Justification: Per capita national growth is being eaten up by constantly growing population. By controlling population, national benefits earned from economic growth can be shared in a better way, raising the level of living standard of the people.	-Ministry of Planning -Ministry of Health and Family Planning
Popu/2: Putting more efforts and resources in raising the level of education. Justification: Education would not only create awareness among the masses about the benefits of small family size, it will also help secure better job with higher pay that would reduce poverty.	-Ministry of Education -Ministry of Planning -Ministry of Health and Family Planning
Popu/3: Creation of well paid and well trained grassroots level family planning workers for motivational work. Justification: Grassroots level workers can give door to door motivational services and distribute birth control materials in a better way. To get good services they must be efficient and well paid.	-Ministry of Planning -Ministry of Health and Family Planning

Economic Development and Employment Generation

Economic development of any place is associated with generation of employment. The generation of employment depends on the rate of investment in various sectors of an economy. An urban economy of any town starts building up with investment in the basic sector that leads to the building up of the non-basic sector. Investment in basic sector is

very bright in Kaliakair as it is very close to Dhaka City. Besides, it has good communication with other adjoining urban centers. However, the Paurashava must ensure that any foreseeable opportunity in economic development is given due attention for its own growth and economic benefits.

Strategy:
Creating basic sector investment climate and leading the local economy forward through promotion of Small and Medium Enterprises (SME).

Table 7.6: Policy for Economic Development and Employment Generation

Policy	Executing Agency
Econ/1: Provision of bank loans on easy terms to attract prospective investors in the SME sector. Justification: Easy loans would encourage and attract prospective investors for investment in small scale industries.	-Ministry of Industries -Ministry of Commerce
Popu/2: Taking of measures to channelize remittance to value adding productive sectors. Justification: Larger amount of remittance is being diverted to land purchase, which is considered as the safest investment. This huge capital may be diverted to productive sectors to help create more employment.	-Ministry of Industries -Ministry of Commerce
Popul/3: Arranging entrepreneurship training programmes for prospective investors. Justification: There are many potential investors who are ignorant of the ways and means of investment and operation of an enterprise. The training can help them get educated in these lines.	-Ministry of Industries. -Ministry of Commerce.

Housing
Being very close to Dhaka city there is an extreme demand of housing for the commuter people. Housing policy and programmes are provided and executed by the national government. There is no local office of the National Housing Authority to execute housing programmes at Upazila level. As a local government, Paurashava can facilitate housing area development by means of providing road infrastructure, drainage, water supply, etc in designated housing zones. The consultant supports the prevailing national housing policy and advocates its execution at all levels, which at the moment is highly lacking.

No slums are observed in this small town, the way they are exposed in large cities. So no slum and squatter related problems are there in the town. This provides a better scope for planned housing development in the Paurashava.

Strategy:

Upholding the role of Paurashava, as a facilitator to provide all necessary infrastructure and services to enable housing by people in general. As a least cost approach, involvement of the land owners can be encouraged in housing area development on a public-private partnership basis.

Table 7.7: Housing and Slum Improvement

Policy	Executing Agency
Policy House/1: Provision of necessary services and facilities to promote housing at private sector. Justification: It is more difficult to provide housing on public sector initiatives, as it involves funding and land acquisition that takes a long time. By providing infrastructure and services, general people can be encouraged to build their own houses.	- National Housing Authority - Ministry of LGRD - Kaliakair Paurashava
Policy House/2: Housing zone land owners can be involved in a participatory development approach, where Paurashava will provide infrastructure and the cost will be shared by land owners.	- National Housing Authority - Ministry of LGRD - Kaliakair Paurashava

Social Amenities and Community Facilities

Social amenities and community facilities include, education facilities, health facilities, open space recreation facilities like, park and playground, amusement park and community centre. For comfortable and healthy urban living, these facilities are the fundamentals. Since these are social services, they must be provided by the public sector agencies as public good. For education and health facilities, the national government have policies and there are separate ministries and their agencies to execute the policies through programmes and projects. There are also Upazila level offices of the concerned agencies to take care of the execution of national education and health policies and programmes. For providing amenities like, park and playground and community centre, the responsibility lies with the Paurashava. For park and playground, the Paurashava may secure local khas land. The open space recreation is difficult to provide as population expands and land price goes higher. Once time is lost, vacant lands are also lost. Amid soaring land price and absence of vacant land, it becomes extremely difficult to provide open space recreation. So, it is better to secure vacant lands for open space before density of population increases and land becomes scarce and pricier. For community center, intensive use of land should be made by making multiple use of the same space, for example, providing community center, ward councillor's office, clinic or any other use in the same building.

Strategy:

Exploring khas /public land within the Paurashava and using the unused/vacant land for providing amenities, before density of population increases and land becomes scarce and dearer.

Table 7.8: Social Amenities and Community Facilities

Policy	Executing Agency
Policy-Amenity/1: Procurement of khas and other public land for park, playfield, community centre. Justification: Since above facilities are non-revenue earning, they should be procured at least cost.	- Ministry of Land - DC Office, Dhaka - Ministry of LGRD - Kaliakair Paurashava
Policy-Amenity/2: Land should be procured for open space facilities as quickly as possible, because when land value will be higher, cost of providing the facilities will also be very higher. Besides, with the growth of population, vacant land will disappear gradually, so no land will be available at strategic locations for providing open space facilities.	- DC Office, Dhaka - Ministry of Land - Ministry of LGRD - Kaliakair Paurashava

7.3.2 Physical Infrastructure Sector

Transport

By far, transport is the most important means to revitalize an urban center. Intra and inter urban transportation facilities create economies of scale for prospective investors and enables easy and comfortable mobility of the residents. Easy and cheaper transportation of raw materials and finished goods create good investment climate for manufacturing enterprises that lead to development of the service sector firms. New employment generates and the non-basic sector expands leading to thriving urban center. To create transportation facilities, quality inter-Upazila and inter-District road network will have to be created that makes movement faster and easy. With good transport infrastructure, economic development may become attractive. Besides, quality of local roads will have to be upgraded to encourage people live in the town. Once population starts increasing, it will expandlocal consumer market and will attract new investments in consumer goods production.

Strategy:

Creation of efficient inter-city and intra-town communication for easy transportation of goods and passengers.

Table 7.9: Policy for Transport Sector

Policy	Executing Authority
Policy-Transport/1: Development of efficient inter-city road network with standard road. Justification: Increased inter-city mobility will increase business transactions and generate investment and employment.	- Roads and Highways Department (RHD)
Policy-Transport/2: Promotion of efficient road transport facilities between urban centers. Justification:	-Bangladesh Road Transport Authority (BRTA)

Policy	Executing Authority
Not only that communication is needed between urban centers, but to attract investment, emphasis must be laid on quality of roads built.	-Dhaka District
Policy-Transport/3: Development of local road network through participatory approach. Justification: Development of roads will involve huge cost. Participatorydevelopment will enable cost sharing, which will reduce cost of road construction substantially.	- Kaliakair Paurashava - Local Government Engineering Department (LGED)

Utility Services

Utility services are the most essential parts of urban life. To make an urban center livable, there must be adequate provision for utility services. Utility services include water supply, solid waste management, power supply, sanitation and drainage. Except power supply, the rest are the responsibilities of the Paurashava.

Strategy:

Attainment of self reliance in revenue collection and adoption of participatory approach to service provision to ensure better services and facilities to the people.

Table 7.10: Policy for Utility Services

Policy	Executing Agency
Policy-Utility/1: Exploration of alternative sources of water to ensure sustainable supply. Justification: Amid constant rise of urban population, it is time to explore alternative sources of water like, rain water harvesting and surface water supply.	- LGED - Kaliakair Paurashava
Policy-Utility/2: Involvement of beneficiaries in solid waste management. Justification: Involvement of beneficiaries in solid wastemanagement will make the operation more effective and reducefinancial responsibility of the Paurashava.	- Kaliakair Paurashava, - NGOs and CBOs
Policy-Utility/3: Exploring re-use and recycling of waste materials to extract resources. Justification: Re-use and recycling of waste materials will produce resources and reduce cost of waste management.	- Kaliakair Paurashava, - NGOs and CBOs
Policy-Utility/4: Publicity on the benefits of hygienic sanitation to motivate people and enable people to have easy access to sanitary materials. Justification: Motivation will encourage people to adopt healthy sanitation and reduce health risks.	- LGED - Kaliakair Paurashava - NGOs and CBOs
Policy-Utility/5:	- LGED

Policy	Executing Agency
Protection of natural drainage system and preparation of hierarchical drainage network. Justification: Natural drainage systems are being grabbed and filled up, which increases the risk of water logging. Well planned hierarchical drainage network helps smooth drainage of storm and waste water.	- Kaliakair Paurashava

7.3.3 Environmental Issues:

From environmental point of view Kaliakair Paurashava is not yet badly affected. There are some issues that must be taken care of. The issue of sanitation has already been dealt within the utility services section. Except cyclone, there is no natural hazard. There is no mentionable air, water or soil pollution in the Paurashava from any mentionable sources at present.

Natural Resources

The Paurashava is not endowed with many natural resources that can be conserved. Among the major natural resources there are 561 ponds, 453 ditches, 44 irrigational canals and 3 natural canals/ khals naturally drain the rain water. Out of the total ponds with an area equal to or more than 0.25 acres and the natural khals need to be protected and conserved to ensure sustainability in drainage and water supply of the Paurashava.

Strategy:

All khas land and canals should be vested with Paurashava for use in community interest.

Table 7.11: Policy for Natural Resources

Policy	Executing Agency
Policy-Nature /1: All khas lands within the Paurashava must be assessed and handed over to the Paurashava for use in community interest. Justification: This will prevent misuse of khas lands by political and powerful local people.	- Ministry of Land - Kaliakair Paurashava
Policy-Nature/2: All natural canals and rivers within the Paurashava must be vested with thePaurashava for maintenance and proper use as drainage canal. Justification: This will help prevent unauthorized occupation and filling of natural drainage.	- Ministry of Land - Kaliakair Paurashava - NGOs and CBOs

CHAPTER-8

IMPLEMENTATION ISSUES

This chapter deals with the issues of implementation of the Master Plan. Here, recommendations have been made about capacity building and resource mobilization for the implementation of the plan.

8.1 Institutional Capacity Building of the Paurashava

In the present context of spatial and legal jurisdiction of the Paurashava for planned development of its area, some recommendations are made here. Also, observing the financial and Institutional strength of individual stakeholders in relation to their liabilities and identifying their shortages and absence of any perfect coordinating body, some suggestions have been made as remedial measures as a whole.

- All urban local governments including Upazila level Paurashavas must be given more independence and autonomy to perform their responsibilities. At the same time, their accountability to the government and people regarding their performance has to be ensured. For this purpose the legal framework of the urban local governments has to be reviewed and updated. The legal provisions have to be consolidated and simplified and make them compatible to changing circumstances. Opportunities must be created in the Act allowing scope for privatization of service providing activities.
- To avoid duplication of development functions, there should be clear line of separation between central government and the urban local government.
- Massive training programme has to be arranged for the municipal staff for computerized accounting, billing and infrastructure development. .
- To improve revenue collection, the urban local governments should be given more power and responsibilities. Measures should be taken for strengthening the Paurashava administration for municipal development.
- Section-50 of the Paurashava Act needs to be revised and more power should be given to the Executive Officer for appointment of employees.

It can not virtually function effectively as a Paurashava under such a stringent financial condition. To function, effectively, it must raise its revenue earning. But it is reported that the Paurashava can not collect all its holding tax from the citizens. Holding tax is the most important source of its own revenue earning. It must take care to ensure 100% recovery of holding tax. The Paurashava can not function effectively depending upon government grant only. The existing manpower position of the Engineering, Development control and Accounts should be substantially raised to handle future volume of work. Moreover, additional staff especially for the implementation of Master Plan will soon be required.

The present plan package imposes a large number of development projects on Kaliakair Paurashava for implementation. Paurashava will not only be the custodian of the plan, it will also directly implement much of the development projects. Besides, it will also be

responsible for monitoring and implementation of the development projects by other urban development and service giving agencies. This situation calls for strengthening of the existing capability of Paurashava.

8.1.1 Staffing and Training

As a traditional system of the Paurashava, engineer and secretary are appointed directly by the Ministry of Local Government and other staffs are appointed locally through the approval of the Ministry after the advertisement on the newspapers. The Paurashava is capable to collect the taxes and tolls prescribed by the government. But still they have lack of tax collection. There is no proper arrangement for staff training only few training are received by LGED which are not sufficient enough. As a result, the staffs are mostly unskilled. They can not deliver proper service to the citizens. Besides, most of them are not qualified enough to render proper services.

8.1.2 Lack of Automation

Still now most works in the Paurashava are done manually. Such practice delays works and deprives the citizens from services. This is also a source of mal-practice and corruption. Modern office and working equipment should be installed. Use of modern technology will increase efficiency in planning and record keeping, finally expedite decision making process.

8.1.3 Town Planning Capacity

8.1.3.1 Institutional Framework (Proposed by UGIIP, LGED)

To rearrange the institutional framework for the Paurashavas recently the government has made a committee for the categorization of all the Paurashavas of Bangladesh. According to the clause no. 72-78 (Paurashava Officer & staff, provident fund etc) of Paurashava Act, 2009 and on the basis of the type and category of works, the committee suggested 5 divisions within the Paurashava framework. Afterward on the basis of the type of works, similarities and technicalities each division is further subdivided into some sections accordingly. The suggested divisions and sections are as follows:

1. Engineering Div:	a)	Development, maintenance & quality control Section
	b)	Water supply, sewerage, drainage and waste disposal Section
2. Planning Div:	a)	IT Section
	b)	Planning Section
	c)	Beautification and recreation Section
3. Administrative Div:	a)	Administrative Section
	b)	Revenue Section
4. Accounts Div:	a)	Budget, accounts and Audit Section
5. Public Health Div:	a)	Food and Beverage Control Section
	b)	Health and Public Welfare Section
	c)	Poura Hospital and Clinic Section (optional)

According to the divisions and their relevant sections the manpower should be set up for each category of Paurashava. The above committee has also chalked out the detail scope of work for each division. The scope ofproposed Planning Division is given in Figure 8.1.

Figure 8-1: Scope of Work for Planning Division

TOWN PLANNING DIVISION

IT Section	Planning Section	Recreational Section
Activities of Information Technology Information and Technology Management. **Task to Execute Information and Technology Management** -Establishment of network system among all the divisions of the Pourashava . -Providing assistance and technical support (software and hardware support) for accounting, tax assessment, tax collection, preparing water supply bill etc. -Establishing, marinating and updating of Pourashava website. -Providing support for MIS. -Establishing GIS set up and database for practicing in Pourashava activities.	**Planning Functions** -Master Plan -Planning Development Projects -Land Development Projects -Building Control -Social Development Plan -Commercial Projects **Steps to execute the functions** **Master plan:** -Preparation of Master Plan,establishing legal basis of the Master Plan and execution of development control on the activities as per Master Plan-Review of Master Plan on aregular interval. -Controlling development projects in excess of land earmarked in the Master Plan. -Preparing and implementing phase-wise development projects, social development projects, commercial projects etc. -Undertaking development projects and controlling implementation of those projects in terms of transport network planning and drainage Master Plan and initiatiation of updating those projects on a regular basis each year. **Building Control** -Approval of design forconstruction/ reconstruction of buildings and collection of fees asper the rules. -Implementation of control systemrelated to inspection of buildingconstruction and completion andchange in building design.	**Functions Concerning Recreation** -Govt. wetland, govt. fishing grounds, pond and low lands; -Tree Plantation, Afforestation; -Park, Playground, open spaces; -Beautification (Landscaping) **Task to execute the works** **Water Bodies and Low Lands:** -Take initiatives to establish infrastructure and facilities for recreational purpose by using govt. wetland, fishing ground, pond and ditch within the Pourashava. -Hand over the responsibility to the appropriate private sector management and fix proper charge fee and ensure its collection which is require for maintaining and operational management of wetland facilities. **Landscaping** -Construction and maintaining aesthetic beautiful substance, sculpture, fountain etc in suitable place of the town which express the local heritage, art, culture, history and education. -Take beatification activities, implementation and maintenance of road side area, major intersection, open space, Pourashava office premise area, in front of important establishment and open space in front of different govt. organizations. -Initiate the activities for agreement with different private bank, insurance, mobile company and other different organizations for the beatification of the town. **Environmental Preservation, Park etc.** -Arrange tree plantation program each year within the Pourashava, afforestation, arrange tree exhibition and take initiatives and implementation for inspiration of tree plantation within Pourashava. -Take initiative and preserve park, playground and open space.

8.1.3.2 Lack of Paurashava Town Planning Capacity

At present, the Paurashava has no town planning section or any appropriate manpower to prepare and implement the Master Plan. For proper implementation of the Master Plan for each Paurashava under UTIDP, establishment of a separate planning unit is indispensable. The Paurashava must strengthen its capacity to implement its Master Plan when it will be completed. It will otherwise be in trouble for implementation, monitoring and updating the Master Plan.

After detail study the Bangladesh Institute of Planners (BIP) recently proposed an organogram of Planning Section/Division for different categories of Paurashavas. Analyzed this proposed organogram the consultant has suggested the following modified Organogram for Kaliakair as a A class Paurashava. Figure 8.2 shows the major division and their inter linkage for a "A" class Paurashava.

Figure 8-2: Organogram for a "A" Class Paurashava

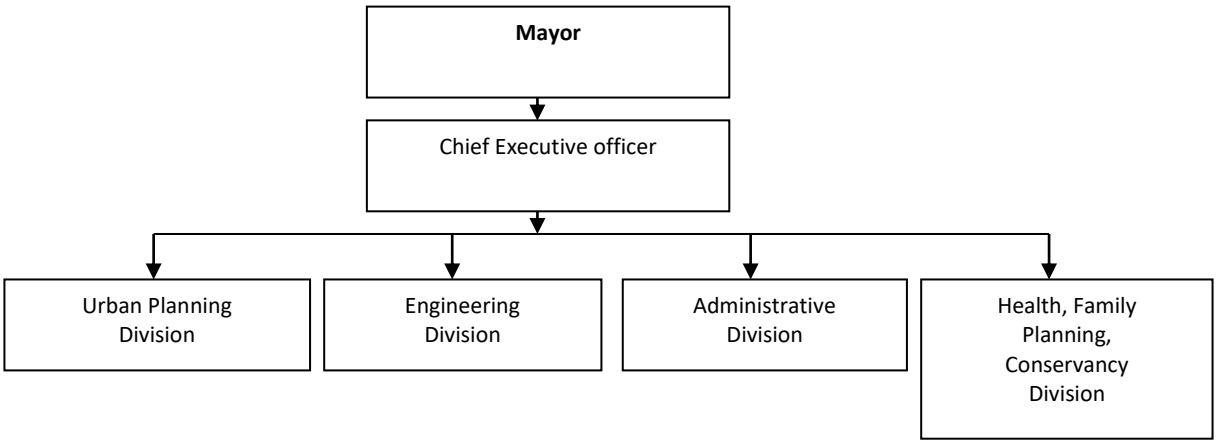

Again, Figure 8.3 shows Urban planning Division for a "A" class Paurashava. Here four posts for professional personnel, urban planners are created. Senior Urban planner will be the head of the division and another one is Urban planner and three other planners will appointed as assistant urban planners. These five planners will play the leading role in Town Planning Division for the Paurashava and will ensure the planned development of the Paurashava planning.

Figure 8-3: Proposed Urban Planning Division for "A" Class Paurashava.

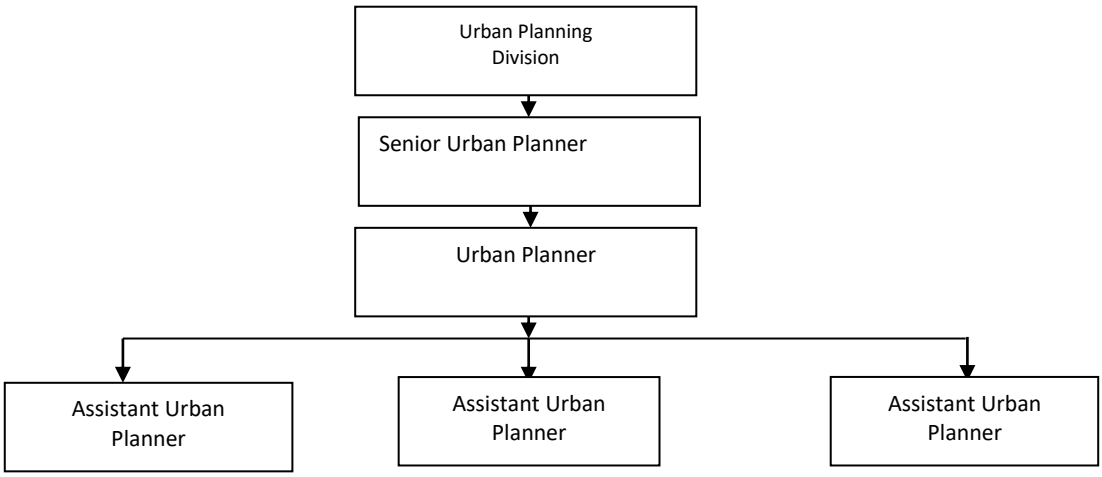

8.1.4 Legal Aspects

The drive to establish strong urban local governance in the Paurashava is yet to be legalized. The governance programmes at present are operated project wise based on the formulated policies of the implementing agencies of the national government. The Laws that the country inherited are mostly prepared during the colonial rule to serve its own interests. Even after independence from the British, the issue of good governance was not infused into the new Acts formulated.

8.1.5 Good Governance in Legal Provisions

There is hardly any Act where the elements of good governance are clearly visible. The consultant has identified some Acts, where some elements of good governance can be traced.

The Paurashava/Municipal Act/Ordinances prepared at different times since 1960's have iterated for the preparation of Master Plan by the Paurashava/Municipality for its planned development. So far urban local government Ordinances/Acts made in 1967, 1977, 2008 and 2009, all suggested for planned development. The Paurashava Act 2009 has made the provision of having a Master Plan prepared by a Paurashava within five years of its inception. The function of the Paurashava also includes that it ensures planned development following the rules of the Ordinance. But there is no provision for public participation in the Paurashava Ordinance 2009. In all these legal documents, people's role has been ignored which is the violation of the norms of good governance.

The constitution of the Peoples' republic of Bangladesh clearly spells out that the Government should work to minimize the gap between urban and rural areas. A planned Paurashava development in that pursuit can provide necessary services to improve quality of life in both urban and rural areas within the Upazila.

8.1.6 Financial Issues

Governance in Kaliakair Paurashava

Financial governance refers to transparency and accountability of financial matters. All financial matters must be transparent to all. People must know about the policies and programs of the Paurashava, how much revenue is collected each year and the amount of expenditure made on annual development. They must also be answerable to the people on how the public money is being spent and accounts being maintained.

The Ministry of LGRD and Cooperative has undertaken a number of projects in respect of establishing governance in upgrading Paurashava accounts system, like, UGIIP, STIFPP. Computer and accessories are supplied under these projects for automation of the accounts system. Besides, trainings are also offered to the Paurashava accounts staff for enabling introduction of automation in accounts system. But all these services have not yet reached Kaliakair Paurashava.

Revenue Management

The Paurashava still follows a traditional management system in tax collection and revenue management though a scheme of computerized automotive financial system has already been introduced in this Paurashava. Assessment section is responsible to asses the tax of the Paurashava and tax collection, and license and bazar section are responsible to collect the tax of the Paurashava. The public is mainly informed about tax collection during the presentation of annual budget. They may, however, get information from the councilor or Paurashava accounts office.

Paurashava's Financial Capacity and Plan Execution

The main focus of Paurashava financial governance is to establish automation in entire financial management. This includes computerization of accounts system, holding tax management, and billing of different service charges. Software for above functions have been supplied and installed in the Paurashavas covered by financial automotive projects. The projects also provided training to the relevant staffs for functioning of the systems. With the implementation of these projects people can now instantly know about the status of their tax payment, bill payment, and licensing. This has not only made the functions of the Paurashava easy, but also has freed the citizens for paying bribe, and experiencing hassle.

The size of annual budgets of the Paurashavas indicates the poor financial status of the Paurashavas. With low income, Kaliakair Paurashava will have to depend substantially on the government funding for implementing the development projects. But the government has limitations of its resources. In such a situation, if the Paurashava can not raise its own revenue adequately, it will not be able to execute much of the development projects under the Master Plan.

8.1.7 Monitoring, Evaluation and Updating

Monitoring and evaluation is a very important part of plan implementation. Monitoring helps check if the plan is being implemented properly. It also measures the level of implementation of the plan. If the plan implementation is not on track, corrective measures can be taken to put execution on the track. After expiry of any plan, evaluation is made about the errors and omissions. Such evaluation helps take corrective measures in the next plan. Such monitoring and evaluation must be carried out from within the Paurashava. But Kaliakair Paurashava is not equipped with qualified manpower to make

such evaluation. Monitoring and evaluation of a plan is essentially, the responsibility of qualified and experienced planners. As there is no planner in the Paurashava, monitoring of plan implementation will be seriously affected. However, plan evaluation can be accomplished by means of out sourcing as and when it is required.

8.1.8 Periodic Review and Updating

The plan package needs to be updated regularly to make it respond to the spatial changes over time. But such updating would require relevant technical professionals and requisite fund that are highly lacking in Kaliakair Paurashava. As there is no planner or

planning section in the Paurashava, review and updating of the Master Plan will require service of senior level planners that Paurashava might not be able to provide. This service will have to be procured by out sourcing and the Paurashava is not even capable to accomplish this financially either. This will create problem when the plans or its components gets obsolete or need to be changed. Another problem would arise when the duration of plans ends. It is necessary that the entire plan document (including all planning and land use proposals) should be reviewed every 4th year of the plan period and will come into execution from the 5th year. The aim of the review will be to analyze the status of implementation of plan provisions, the changing physical growth pattern, infrastructure development, and the trend of public and private physical development including growth direction.

A new set of plans will have to be prepared replacing the old ones. This problem, however, can be overcome by undertaking another planning project by LGED. So, for regular updating and changes, and plan implementation monitoring, the Paurashava should immediately set up a planning section with a number of planners and other staff. The section will not only look after planning, but will also be responsible for development control, estate management, and project preparation. Since the planners would be qualified and skilled in computer operation, they can also help achieving automation of the Paurashava functions.

8.2 Resource Mobilization

Resource mobilization will be one of the most challenging tasks in implementing the current plan package. Though the development proposals are said to be executed by a large number of development agencies, but it is beyond doubt that the heaviest burdens will have to be shouldered by the Paurashava. As a local government agency, it suffers from resource constraint due to low level of urbanization and investment by both public and private sectors. The land value will maintain perpetually low growth rate in the town. Therefore, prospect of mobilization of substantial resource from sale of serviced land is extremely meager. For the same reason, revenue earning from betterment fee, planning permission and other sources may also remain low. Paurashava is heavily dependent on the government for executing its development projects as it is unable to collect sufficient revenue from its tax and non-tax sources. Therefore, it is clear that execution of development projects under the current plan will depend heavily on the government response to supply adequate fund. This situation calls for increasing revenue earning by generating new revenue sources.

8.3 Concluding Remarks

From the past experience, it has been observed that plans are prepared for organized development, but development control has been subject to negligence. In most cases, execution has been piecemeal. It is unfortunate that town planning has not yet become a part of our urban development culture. Individuals develop lands and construct buildings with a little respect for planned development, and the concerned authority is also unable to exercise full control on development. Some strict measures are necessary to make

stakeholders follow up plans and development rules. Awareness is to be built among the people to follow the Master Plan provisions and plan. Government agencies must be compelled to follow plans. Existing laws in this regard must be updated incorporating provisions of plan execution.

CHAPTER-9

URBAN AREA PLAN

This is the first chapter of Part- B that starts with Urban Area Plan. Urban Area Plan is the mid level plan that covers the existing Paurashava. It lays down the land use zoning plan and infrastructure development proposals at the town level. Land use planning is an important part of Master Plan ensuring that land is used efficiently for the benefit of economy, society and environment of Kaliakair Paurashava. This planning means the scientific, aesthetic, and orderly disposition of land, resources, facilities and services with a view to securing the physical, economic and social well-being of urban communities.

9.1 Goals and Objectives of Urban Area Plan

Urban Area Plan is the first phase illustration of the Structure Plan intended to be implemented over a time span of 10 years. The Urban Area Plan has been prepared within the policy framework of the Structure Plan and aims to attain the overall project objectives. So there is a hierarchical relationship between the two. In fact, Urban Area Plan is the first phase detailed illustration of the policies and strategies of the structure plan.

The preparation of Master Plan for Kaliakair Paurashava is aimed towards its future development, and covers the areas that are likely to become urban in future. The Urban Area Plan is aimed to:

Determine the present and future functional structure of the town, including its land uses; and

Provide infrastructure proposals for improving and guiding development of future urban area.

9.2 Methodology and Approach to Planning

The base map supporting for land use survey was obtained from the physical feature survey that contained all categories of physical features within the planning area. During physical feature survey, all structures and the functions of principal buildings were picked up and depicted on the map. The physical features were superimposed on a mouza map and printed for land use survey on the map. The map was carried to the field by investigators for detailed plot to plot land use survey. The field investigators carrying the map visited each and every plot and the structures therein and noted their uses in writing and marking them on the map with colour pencil. They also verified the land use names put during the physical feature survey. Back in the office, the common land uses of plots were delineated in the map as per land use format given in the ToR. The delineated zones were then digitized and a new land use map was prepared for the entire planning area. After land use demarcation, field checking was done to correct possible errors.

Urban Land Use Plan is aimed to guide the physical development of Kaliakair town including its economic and social activities. This plan adheres to the policy directives

spelled out in the Structure Plan. The current Urban Area Plan is akin to the traditional Master Plan approach prevalent in the country that designates plot-to-plot use of land apart from infrastructure development proposals. Thus it will also serve as a development control mechanism/instrument. The Urban Area Plan is, therefore, more rigid than Structure Plan. Making a land use plan on a cadastral map makes the Urban Area Plan more rigid. Once the plan on a cadastral map is drawn and accepted by the government and formalized, it gains a formal status and thus becomes a binding for all concerned.

The objectives of the Urban Area Plan have been attained through:

- Orderly location of various urban land uses;
- Location of appropriate transportation and drainage network; and
- Orderly location of services and facilities.

9.3 Delineation of Planning Areas

Planning area boundary has been decided with the assistance and advises received from Kaliakair Paurashava Mayor, Councilors and other professional staffs and Gazette notification (S R O No-83 Law/ 2001). In order to delineate this boundary, there was a wide reconnaissance survey of the entire Paurashava area including those areas which have future potential growth. But since, the formation of Kaliakair Paurashava is 10 years back (2000); the development trend do not took much momentum as it required. It is still in her infancy. In addition, the Mayor and the Councilors opinioned in favor of keeping the Paurashava area encompassing the nine wards as exist for next 20 years. Strong arguments from Paurashava Mayor and Councilors were advised to extend the boundary as it is not an old Paurashava and various developments has taken place, and the present area is not enough as study/ planning area. Though the 2000 Gazette declared Kaliakair urban area as Paurashava composed of nine Wards where the adjoining areas are still rural in character; not having significant urban development trend. So, Consultant has considered 27.28 sq. km. with nine Wards as the planning area.

9.4. Content and Form of Urban Area Plan

The Urban Area Plan is presented in both map and textual format. The plan map is presented in 1:1980 or 1 inch to 165 feet scale, superimposed on latest cadastral/revenue map having plot boundaries within mouzas. The plan is accompanied by an explanatory report supported by necessary figures, maps and data. The report explains the various plan proposals and other components of the plan.

The Urban Area Plan of the Master Plan of Kaliakair Paurashava contains several components. These are:

- Land Use Plan;
- Transportation and Traffic Management Plan;
- Drainage and Environmental Management Plan; and

- Proposals for Urban Services.

The Urban Area Plan is concerned only with the area where the greatest change is expected in the medium-term (10 years). For this area, it indicates how the Structure Plan policies might be pursued whilst also giving greater precision to the spatial dimension of the policies.

The outline of the Urban Area Plan gives guidance to the Paurashava as to how it can develop the roles i.e. to promote development, to co-ordinate development and to control development.

The Urban Area Plan has been divided into four main parts. These are preceded by four introductory chapters which explain the scope of the report and provide background to the Urban Area Plan including its relationship with the Structure Plan.

The Landuse Plan is the first chapter of Part-B of this report. It identifies approaches of planning, existing and projected landuse and proposed landuse. Requirement of land for different purposes, landuse zoning and plan implementation strategies are also included here.

The Transportation and Traffic Management Plan includes existing conditions of transportation facilities, intensity of traffic volume, degree of traffic congestion and delay, analysis of existing deficiencies, travel demand forecasting for next 20 years, future traffic volume and level of services and transportation development plan. Moreover, transportation system management strategy and plan implementation strategies are also presented in this plan.

Drainage and Environmental Management Plan is the third chapter of the Urban Area Plan. The chapter again subdivided into two parts – drainage part and environment part. Existing drainage network, land level and topographic contour, plan for drainage management and flood control and plan implementation strategies are the components of the drainage part. Existing environmental condition, solid waste and garbage disposal, environment pollution, water logging, natural calamities and localized hazards, plan for environmental management and pollution control and plan implementation strategies are the key issues of the environment part.

Fourth part of this report is Plan for Urban Services. Existing condition and demand of the Services, projection on existing and proposed Urban Services, Proposals for Urban Services and Implementation, monitoring and Evaluation of the Urban Services Plan are the key issues of this part.

CHAPTER-10

LANDUSE PLAN

The Landuse Plan is the first element of the Kaliakair Paurashava Urban Area Plan. The Landuse Plan is being prepared for managing and promoting development over medium-term on the basis of the strategies set by the longer-term Structure Plan. Basically the Landuse Plan is an interpretation of the Urban Area Plan over the medium-term (10 years). The coverage of the Landuse Plan considers existing urban areas and their immediate surroundings with the purpose of providing development guidance in the areas where most of the urban development activities are expected to take place over the next 10 years. Delineation of the Landuse Plan area is based on the urban growth area identified as the Urban area Plan. It contains more details about specific programs and policies that require to be implemented over the medium-term.

10.1 Methodology and Approach

For the preparation of Landuse Plan, spatial information or data of all existing landuses from landuse survey was processed and stored under a comprehensive GIS database component. GIS software such as PC ArcView and PC ArcInfo (Version as suggested in the ToR) has been used for processing of physical feature survey data. Data was stored in WGS-1984 format (latitude, longitude, ellipsoidal height in meter) and later on it was projected and stored in Lambert Conformal Conic (LCC) projection system.

Landuse map has prepared applying the appropriate systematic command through GIS. Landuse is transferred on CS Mouza map in a scale of RF 1:1980. Landuse is divided into different categories and subcategories approved by the LGED. Landuse colours and legend were also fixed by the PD (Project Director) of the UTIDP, LGED. Legend contains, necessary themes, features using different symbolize schemes. As per suggestion of the LGED for fixed legend and approved format for landuse, Consultants have prepared existing landuse map.

Based on the existing landuse map, the landuse plan is being prepared according to the guidelines given by the ToR. The planning starts from formulation of strategies to issues like functional quality (meeting of space requirements for different functions, relation between functions etc., aesthetic quality, flexibility, deviation, public agency support etc.) for plan implementation. The planning in detail also covers the delineated existing urban area and the new urban area.

10.2 Existing and Projected Landuse

10.2.1 Introduction

Details of landuse include structures and uses of land in multi-dimensions. Every individual structure and its details were surveyed during the survey period and find out the uses of land. Most of the landuse information was collected through physical feature survey. Later on, landuse map is prepared showing different use categories.

At present, except about 21.56% agriculture land, 23.57% residential development, 19.23% forest land and 7.99% water bodies, rest land are using for various purposes. According to the physical feature survey, the study area has as many as 2016 structures and among these 83.29% are residential Of the total, 68.35% residential structures of the area are katcha, 25.24% are semi-pucca and the remaining 6.40% are pucca. For rearrangement and enforcement of new provision those land will generate planning scope. Due to the absence of airport and helipad, vertical expansion of the building will be easily encouraged in anywhere of the Paurashava. New innovation for increase the agriculture production may be encouraged easily.

The Paurashava seems a barren land area. People are not quite aware about the modern facilities available to their door step. It is easier to inject guiding principles, modern facilities and long run development control for the Paurashava as well as for the inhabitants.

10.2.2 Analysis and Projection on Existing and Proposed Landuses

Due to nearness of Dhaka city and rapid urbanization and rapid industrial development industrial based township should be encouraged in the preparation of Master Plan. Growth of population is the natural trend and at the same time, expansion of non-agricultural use on agriculture land is also natural tendency of the people. This will be controlled through the Compact Township concept with the encouragement of vertical development. In case of government services, specific building may accommodate different type of offices.

Future landuse have been calculated according to the development control for the masses and the standard supplied by the LGED. In case of public land, existing use and khas land may be emphasized. Willingness and participation of the people in development activities may be the key factor for future landuse demarcation. Slow change of landuse has emphasized rather than rapid change. Let the people do whatever he likes on own land – such concept should not be considered for future projection of landuses. Three parts of the projection are landuse change, landuse control and landuse restriction has been included in the Master Plan. In any case, river front areas should be restricted for human habitation. As a result, river water will safe from contamination.Projection of landuse depends on the growth of population. Projection on landuse also depends on present trend of migration.

In case of landuse change, standard given by the LGED according to the projected population and area for the specific service is being calculated. Minimum use of agriculture land for physical development is emphasized in the plan. The vertical expansion will be emphasized rather than horizontal. In case of road network planning, missing links will get priority rather than new roads. For the development of pisciculture, most of the ponds and ditches may be preserved, in some exceptional cases; small number of ditches may be used for physical development activities. Landuse control and landuse restriction will be imposed by the Paurashava according to the prescribed plan.

The standards presented in the Table-10.1 are fairly generous and considered for the Paurashava (including extended areas). Adjustments have to be made in the core areas and a time line may be set to gradually achieve these standards over a five, ten and fifteen years period.

Commerce

In total, 111.59 acres commercial land is in the Paurashava.

Determination of Standard: According to the standard on Wholesale Market/bazar, 1 acre land is to be provided for every 10,000 populations and 1 acre land for every 1000 population for Retail sale market. Again, 0.25 acre of land is being standardized for per corner shop, 1 acre per neighbourhood market, 1.5 to 2.5 acre per super market and 1 acre per 25,000 populations for bank, hotel, garage and godown. The study team has considered 345237 populations for the study area up to the year 2031. For this population total number of required wholesale market/bazar stands at (345237/ 10,000), means 34.52 acres land is being needed up to the year 2031 and for retail sale market, 505.93 acres.

Recommendation / Forecast: In the planning area already has retail sale market including wholesale market/bazaar. The study team recommends poura-super market, wholesale market/bazaar, katcha bazar on earmarking land. Necessary planning permission and design criteria will be provided by the Paurashava. The lands may be allowed to use for other commercial purposes like bank, hotel and godown. Few new area has for commercial zone and other probable areas for commercial development are earmarked as mixed use area so that they may use this land for residential/commercial purpose according to the demand.

Industry

In the Paurashava, 772.56 acres land is under industrial development.

Determination of Standard: According to the standard, land is being allocated as 1.5 acres for every 1000 populations in case of small-scale industry, 5 acres per 10000 populations for heavy industry and service industry and 1 acre per 1000 population for cottage/agro-based industry. The study team has estimated 345237 populations for the planning area up to the year 2031. For this population total required land for industry stands at (345237/ 1,000*1.5)517.86 acres land for small-scale industry, 345.24 acres for cottage / agro-based industry up to the year 2031.

Recommendation / Forecast: The study team observed that in this areas there is huge indusrial development and have limited area for further industrial development. Considering the real scenario the consultants has not proposed to extend more. Necessary planning permission will be followed by the Paurashava. The lands, however, should not be allowed to use other than industry. The industries which are located dispersely should be accommodated within the prescribed industrial areas.

Primary School

There are 26 primary schools in the planning area covering together 4.08 acres land.

Determination of Standard: According to the standard on primary school, 1 school with 2 acres of land is to be provided for every 5,000 population. The study team has estimated 345237 populations for the planning area up to the year 2031. For this population total number of required primary school stands at (345237/ 5,000), means 69 schools with 138 acres land will be needed up to the year 2031.

Table 10.1: Existing Landuse of Kaliakair Paurashava

Sl No.	Land Use types	Total	Percenage (%)
1.	Agriculture	1,709.33	25.36
2.	Circulation Network	201.10	2.98
3.	Commercial Activity	111.59	1.66
4.	Community Service	9.99	0.15
5.	Education & Research	43.35	0.64
6.	Forest	1,316.52	19.54
7.	Governmental Services	15.99	0.24
8.	Manufacturing and Processing Activity	772.56	11.46
9.	Mixed Use	33.07	0.49
10.	Non Government Services	0.34	0.00
11.	Recreational Facilities	12.48	0.19
12.	Residential	1,634.37	24.25
13.	Restricted	107.73	1.60
14	Service Activity	7.00	0.10
15.	Transport & Communication	8.45	0.13
16.	Urban Green Space	2.72	0.04
17.	Vacant Land	200.23	2.97
18.	Water Body	552.16	8.19
Total		**6,738.96**	**100.00**

Map 10.1 : Existing landuse of Kaliakair Paurashava

Map 10.2: Landuse Plan of Kaliakair Paurashava

Recommendation / Forecast: According to the standard there is a need for new primary school. Poposal has given not to increase the number of school, the existing area of school has proposed for extension. With increasing of enrollment, existing primary schools may be expanded vertically.

Secondary School

There are 13 secondary schools in the planning area covering together 5.86 acres land.

Determination of Standard: According to standard, 5 acres of land may be provided for every 20,000 population for one secondary school. The projected population of the planning area is 345237 up to the year 2031. Therefore, as per standard the planning area needs (345237/ 20,000) 17 secondary school with an area of 85 acres up to the year 2031.

Forecast / Recommendation: As per above standard, more secondary school is needed. Poposal has given to increase the number of school, the existing area of school has proposed for extension. With increasing of enrollment, existing primary schools may be expanded vertically.

College / Higher Secondary School

There is five college in the planning area with a area of 18.97 acres of land.

Determination of Standard: The standard for college is 10 acres per 20000 populations. So there is a need of 17 colleges with an area of 170 acres as per planning standard in 2031.

Recommendation / Forecast: Poposal has given to increase the number of college, the existing area of college has proposed for extension. With increasing of enrollment, existing primary schools may be expanded vertically.

Vocational Training Centre

An important component for the rural masses is vocational training. Multi-dimensional training may be offered through the centre. People are being benefited directly and prepare him as a technical person enjoying training from vocational centre. At present, there is no vocational training centre in the Paurashava.

Determination of Standard: The prescribed standard for vocational training centre is 5 to 10 acres for Upazila.

Recommendation / Forecast: The study team recommends a vocational training centre.

Beaides that there is 18 madrssa in the Paurashava area. The study team also recommends to establish a university and a medical college in this area.

Health Facilities

Existing health facilities are not bad in this Paurashava. There is one upazilla health complex and three clinics in this Paurashava. Total area under this category is 7.00 acres.

Determination of Standard: The prescribed standard for health facilities are 10 to 20 acres for Upazila Hospital and 1 acre per 5000 population for Health centre/Maternity clinic. According to the standard, up to the year 2031, (345237/5000) means 69.05 acres of land will be needed for Health centre/Maternity clinic.

Recommendation / Forecast: The study team has earmarked area for health facility but as per standard. Necessary planning permission will be offered by the Paurashava. The lands, however, should not be allowed to use other than health services.

Open Space

At present there is 2.72 acres of land under this category in the Paurashava.

Determination of Standard: The standard recommends 5 to 10 acres land for stadium/sports complex, 3 acres per 20000 populations for playground, 1 acre per 1000 population for park and 1 acre per 1000 population for Neighbourhood Park. A total of 760.31 acres of land is needed for this category.

Recommendation / Forecast: The study team is recommended Stadium, play field, central park, Neighborhood Park. Community forest and tourism development also prescribed without considering any standard. Amount of land for those components have been considered through discussion with the stakeholders.

Community Facilities

Community facilities include Community centre, Graveyard/Burial ground, Creamation Electric sub-station, Post office, T&T office, Public library, Eidgah, Mosque/Church/Temple, Police station, Police box/outpost, Fire service station, Waste disposal site, club, etc. Existing land under community facilities is 9.99 acres.

Determination of Standard: The standard suggests 1 acre per 20000 for the community centre, Graveyard/ Burial ground and Eidgah. Again, 0.5 acre per 20,000 populations prescribed for Mosque/Church/Temple, Post office and T&T, 1 acre per 20,000 populations for Fire service station and 3–5 acres per Upazila Headquarters and police station.

Recommendation / Forecast: The study team recommends community centre, graveyard, ward office. Areas for Mosque/Church/Temple, Post office and Fire service station remain with existing areas.The study team has included Ward center as acommunity facility in each ward.

Administration

In the Paurashava, 15.99 acres land is under administrative use.

Determination of Standard: According to the standard for administrative land, 15 acres of land is to be provided for every Upazila, 3 to 5 acres per Paurashava office and 10 acres for jail/sub-jail. Total required land for administration stands at 30 acres.

Recommendation / Forecast: The planning area already has one Upazila office, one Paurashava office and other govt. offices. The planning team recommend a new administrative area.

Recreation

About 12.48 acres land including heritage site is under recreational use in the Paurashava.

Determination of Standard: According to the standard for recreational facilities, 1 acre of land is to be provided for every 20,000 population for cinema/theatre. The study team has estimated 345237 populations for the planning area up to the year 2031. For this population total 17.26 acres of land is being needed up to the year 2031.

Recommendation / Forecast: The study team recommends some area for theater under this category.

Residential

Existing residential areas of the Paurashava is 1634.37 acres. Existing net Density is 96 person per acre. All type of residential lands is included with such amount of land.

Determination of Standard: The standard recommends in Table-10.1 is 150 persons per acre (net). Again, it is recommended 200 persons per acre (net) for real estate or housing areas both for public and private. No standard is being recommended for low-income group.

Recommendation / Forecast: According to the standard (150 persons per acre), 2308.58 acres land will be needed up to the year 2031. As the area is in pure urban character and there is vital potentiality for future rapid urban development, there is huge opportunity for private sector housing development. The consultant team assumed that within 2031 major change will be occurred in urban development. Considering 150 person/acre there is a need for further residential land development. Though this area is in pure urban character so vertical expansion will take place and dencity may be 200 person/acre. If we consider 200 person/ acre for residential area there is no need extra land for residential development.

Conservation and harvesting of rain water in Government Blocks, Commercial Buildings and Institutional Buildings. They should prove required facilities and infrastructure for conservation and harvesting of rain water available to them.

Following requirements are optional and should be provided in residences depending on site conditions and as per case to case basis.

Terrace Water Collection: The terrace shall be connected to a sump or well through filtering tank by PVC pipes. A valve system shall be incorporated to enable the first part of the rain water collected to be discharged to the soil if it is dirty and make arrangements to collect subsequent discharge.

Open Ground: Whenever there is open ground a portion of top soil should be removed and replaced with sand to allow percolation of rain water.

Table 10.2: Existing and proposed landuses including standard

Types of Land Uses	Recommended Standard	Existing (acre)	Future land requirement (2031)	Proposed Land (acre)	Percent (%)
Residential		**1634.37**	**2301.58**	**2,094.61**	**31.08**
General residential	100 persons/1 acre	-	3452.39	-	-
Real Estate – Public/Private	200 population/ 1 acre	-	0.00	-	-
Circulation Network		**201.10**	**10-15%**	**514.84**	**7.64**
Paurashava primary roads	150 – 100 feet	-	-	-	-
Paurashava secondary roads	100 – 60 feet	-	-	-	-
Paurashava local roads	40 - 20 feet	-	-	-	-
Railway line		-	-	-	-
Education and Research		**43.35**	**535.90**	**396.39**	**5.88**
Nursery	0.5 acre/10,000 population	-	-	-	-
Primary School/ kindergarten	2.00 acres/5000 population	-	-	-	-
Secondary/High School	5.00 acres /20,000 population	-	-	-	-
College	10.00 acres/20,000 population	-	-	-	-
Vocational Training Centre	5 – 10 acres / Upazila	-	-	-	-
Other	5.00 acres / 20,000 population	-	-	-	-
Open Space		**1,297.81**	**760.31**	**250.28**	**3.71**
Stadium/sports complex	5 – 10 acres/Upazila HQ	-	18.04	-	-
Play field/ground	3.00 acres/20,000 population	-	51.79	-	-
Park	1.00 acre /1000 population	-	345.24	-	-
Neighborhood park	1.00 acre /1000 population	-	345.24	-	-
Forest land		1,295.09	-	-	-
Recreational		**12.48**	**35.31**	**7.37**	**0.11**
Cinema/ Theatre	1.0 acre /20,000 population	-	17.26	-	-
Health Services		**7.00**	**79.05**	**74.39**	**1.10**
Upazila health complex/ hospital	10 -20 acres/Upazila HQ	-	10.00	-	-
health centre/Maternity clinic	1.00 acre/ 5,000 population	-	69.05	-	-
Community Facilities		**9.99**	**96.23**	**80.12**	**1.19**
Mosque/Church/Temple	0.5 acre /20,000 population	-	8.63	-	-
Eidgah	1.0 acre/20,000 population	-	17.26	-	-
Graveyard	1.00 acre /20,000 population	-	17.26	-	-
Community centre	1.00 acre /20,000 population	-	17.26	-	-
Police Station	3 – 5 acres/Upazila HQ	-	9.02	-	-
Police Box/outpost	0.5 acre/ per box	-	0.90	-	-
Fire Station	1.00 acre/ 20,000 population	-	17.26	-	-
Post office	0.5 acre /20,000 population	-	8.63	-	-
Utility Facilities		0.53	79.04	**11.97**	**0.18**
Water supply	1.00 acre/ 20,000 population	0.00	17.26	0.29	-
Gas Station	1.00 acre/ 20,000 population	0	17.26	0	-
Solid waste disposal	4-10 acres/ Upazila HQ	0.12	10.00	8.14	-
Waste transfer station	0.25 acres/ per transfer station	0	0	0.89	-
Electric sub-station	1.00 acre/ 20,000 population	0.18	17.26	0.18	-
Telephone exchange	.5 acre/ 20,000 population	0.10	8.63	0.10	-
Fuel station	.5 acre/ 20,000 population	0.13	8.63	0.13	-
Slaughter House	As per requirement	-	-	0.73	-

Types of Land Uses	Recommended Standard	**Existing (acre)**	**Future land requirement (2031)**	**Proposed Land (acre)**	**Percent (%)**
Public toilet	As per requirement	-	-	0.23	-
Others	As per requirement	-	-	1.32	-
Commerce and Shopping		**111.59**	**379.76**	**127.32**	**1.89**
Wholesale market	1.0 acres/ 10000 pulation	-	34.52	-	-
Retail sale market	1.0 acres/ 1000 population	-	345.24	-	-
Corner shops	0.25 acre/per corner shop	-	0.00	-	-
Neighbourhood market	1.00 acre/per neighborhood market	-	0.00	-	-
Super market	1.50 – 2.50 acres/per super market	-	0.00	-	-
Residential cum commerce		-	0.00	-	-
Industry		**772.56**	**863.10**	**751.14**	**11.15**
Small scale	1.50 acres /1000 population		517.86	-	-
Cottage/agro-based	1.00 acres /1000 population		345.24	-	-
Transport & Communication		**8.45**	**51.27**	**31.75**	**0.47**
Bus terminal	1.0 acre /20,000 population	-	17.26	-	-
Truck terminal	0.50 acre /20,000 population	-	8.63	-	-
Launch/steamer terminal	1.00 acre /20,000 population	-	17.26	-	-
Railway station	4.00 acre / per Station	-	7.22	-	-
Rickshaw/van stand	0.25 acre /one baby taxi/tempo stand	-	0.45	-	-
Passenger Shed	0.25 acre /one baby taxi/tempo stand	-	0.45	-	-
Government office zone		**15.99**	**30.00**	**41.46**	**0.62**
Upazila complex	15.00 acres	-	15.00	-	-
Paurashava office	3 – 5 acres	-	5.00	-	-
Jail/Sub-Jail	10 acres/Upazila HQ	-	10.00	-	-

Source: LGED standard and Consultants' Analysis.

10.3 Landuse Proposals

10.3.1 Introduction

Basically, landuse proposal involves with the existing conflicting landuses. Those conflicts may be raised due to different causes. Inhabitants of the Paurashava are not aware about the land level and slope direction of the Paurashava. Without knowing this information they are raising their land up to a mark and constructing permanent structure. As a result, water logging problem during rainy season is all over the residential areas.

Due to the absence of development control, the core area of the Paurashava is already developed as mixed-use area. Commercial, residential, administrative, educational uses are admixture in the core area. Zoning provision, landuse control should not be enforced in such type of the core area.

At present, the Paurashava is a natural developed area. Rearrangement of the existing use is not possible. Land acquisition for expansion of road (to increase the width of road) will create socio-political hazards. As a result, the roads in the core area remain same as today.

For water supply network, construction of sewerage facilities and removal of fire hazards, at least 20 feet width road is necessary. In the Paurashava, except Regioal Highway, such type of road is absent. New road will form new township on agriculture land. These processes will washout agriculture domination from the Paurashava. Compact Township will be effective for new formation, not for the mixed-use areas where most of the roads are 8 to 10 feet width.

10.3.2 Designation of Future Landuse

- Identification and development of sites for government housing. After preparation and implementation of the master plan, different types of government activities will be increased. Residential accommodation will be needed for those government employees. A site for government housing should be reserved. National Housing Authority is appropriate for performing this responsibility.
- Encourage central government to decentralize industrial development from Dhaka. Those facilities may be relevant with specific agro-product such as jute for jute industry, cane and bamboo for handicrafts, poultry and horticulture farming, export-oriented vegetation, etc. Different authorities such as Agriculture Development Corporation, Small and Cottage Industries Corporation, Directorate of Livestock and Poultry may be the responsible authority.
- Provision of sites and services schemes for the low and lowest income groups. The Paurashava authority and Schedule Bank may be appropriate for performing these responsibilities. Housing for low-income group, distribution of khas land among the lowest-income group and loan with low-interest for house construction may be the appropriate schemes.
- Upgrading of slum and squatter settlements. Mostly, the vulnerable groups are affected by river erosion, form slum and squatters on public land. If possible, those formations should be upgraded providing basic utility services. It is better, in Paurashava context, the people are living in the slum and squatters, rehabilitate them with the provisioning of housing for lowest-income group. The Paurashava and NGOs can perform such role.
- Location for new industrial development. The industrial area prescribed in the Landuse Plan will be developed provisioning all utility services. The authorities relevant with those utility services will perform the responsibilities. At first, the polluting industries (water and noise) from their original location should shift to the new location. Imposition of taxes, tax holiday and subsidized taxes may be imposed by the Paurashava for such rearrangement.
- Monitoring the principal aspects of community facility provision in the Paurashava. Wholesale or retail market, specialized clinic, etc. are under this community facility. When any difficulties will be encountered in case of suitable site selection considering demand of the inhabitants, the Paurashava will perform the lead role.

10.3.3 Landuse Zoning

Zoning is a classification of landuses that limits what activities can or cannot take place on a parcel of land by establishing a range of development options. Zoning has been defined as an action through legislation provided to a development authority / Paurashava to control a) heights to which buildings may be erected; b) the area of lots that must be left un-built upon; and c) the uses to which buildings may be constructed.

Area / Use Zoning

The objective of area zoning is to specify which types of landuse are considered appropriate for different areas or 'zones', and it therefore indicates the planning control objectives of the authority or municipality for its administrative area. The authority is obliged under the planning acts to designate in its development plan objectives for the use solely and primarily of particular areas for particular purposes.

According to the landuse table, area zoning is divided as agriculture, residential, commercial, industrial, administration and institutional. The zone has further segmented and detailed in the Ward Action Plan. A detailed scenario as plot-to-plot basis is also presented with the calculation of covered area in the landuse plan.

Density / Bulk Zoning

Aim of the density zoning is to provide an acceptable density which is related to the designed facilities and amenities especially for the residential areas. This will ensure a healthy community and enjoyable community life. In a particular area, how much number of buildings will be permitted and constructed, the decision is under the density zoning. Provisioning of setback rule and percent of land uses for different purposes is the prime consideration of density zoning. The proposed percentage mentioned in the landuse table is the only tool to control building density in the Paurashava.

Height Zoning

This zoning provides height limits for structures and objects of natural growth and standards for use of an area which encourage and promote the proper and sound development of areas. It is also applicable to height restrictions for flight safety around airports or other similar purposes.

For effective development control, in addition landuse zoning individual facility and the structures therein is complied certain regulations imposed to ensure desirable end. Relation between ground cover of buildings and the land parcel that house it, minimum setback of building from the adjoining plot boundaries and the maximum floor area that can be constructed in relation to plot size and the connecting road among many other details, are controlled by Building Construction Rules, 1996. Besides, Bangladesh National Building Code focuses on the appropriate materials, construction method, building safety and associated issues. In absence of Paurashava Master Plan the above rules did not have scope for area specific rules and hence were common for the whole development process.

According to the Building Construction Rule, 1996, minimum permissible road width for obtaining plan permission is to shown, construction is allowed on plots connected by narrow roads provided the plot owner leaves formally half of the addition area needed to make the road 6m for widening the road to the permitted minimum. Perhaps the intension behind this was that gradually the whole road would rise up to 6m in short time and it is true for new areas. But congested unplanned area represents an alarming picture. In commercial area, most of the plots are occupied almost entirely by pucca structures covering the property line connected by the narrow pathways. Those owners did not bother for Paurashava's plan permission and a handful of those who obtained plan permission did not care to follow them. It is suggested that existing rules need to be modified to tackle the environmental problems created by illegal building construction.

10.3.4 Summary Showing Distribution of Land for Existing and Proposed Landuse

After a detailed consultation between the PMO and the consultants of the project, the land use classification for the Paurashava Master Plan has finalized. The followings are the finalized land use zone classification recommended by the PMO.The permitted use of land under different category of land has shown in the **Annex-B.**

1. Urban Residential Zone
2. Rural Settlement
3. Commercial Zone
4. Mixed Use Zone
5. General Industrial Zone
6. Government Office
7. Education & Research Zone
8. Agricultural Zone
9. Water body
10. Open Space
11. Circulation Network
12. Transportation Facilities
13. Utility Services
14. Health Services
15. Community Facilities
16. Recreational Facilities
17. Forest
18. Urban Deferred
19. Beach
20. Miscellaneous

21. Heavy Industrial Zone
22. Historical and Heritage Site
23. Restricted Area
24. Overlay Zone

First 17 landuse zoning of the above list are available and proposed for Kaliakair Paurashava Master Plan and the last 7 will not be applicable for Kaliakair. In the sections below, the general definition of the use and description of associated permitted and conditionally permitted uses under each land use zone have been provided. The uses that are not listed here in any of the categories shall be treated as Restricted Use for the corresponding land use category and shall not be permitted only except unanimously decided otherwise by the appropriate authority. In such situations the use shall get permission in the category of New Use.

Following is a short description recommended land use zones.

Urban Residential Zone

Urban residential zone refers to all categories of urban residential areas, including exiting ones and the residential land use proposed under the present master plan. This includes single family housing or multi-family residential. Zoning for residential use will permit some services. It will permit high density land use. In the year 2031, total population of the Paurashava will be 345237. If, standard of population considers 150 persons per acre, total residential land will be needed 2301.58 acres. Existing residential area of the Paurashava is 1634.37 acres. So, there is need of additional land for future residential development. Considering the development pattern a total of 2,094.61 (31.08%) acres of land has proposed under this category including 2 planned residential area, 1 low income housing area and 1 area for resettlement zone.

Table 10.3: Proposed new areas for planned residential development

Proposed facilities	Ward No.	CS Mouza Name	Plot No.	Area in Acre
Planned Residential Area-1	1	Kaliakair_054_00	1009 part, 1018 part, 1025-1033, 1040-1048, 1486-1493, 1636	8.08
	3	Latifpur_353_00	325, 341 part, 342-348, 351 part, 352-371, 379, 384	15.11
Planned Residential Area-2	2	Latifpur_353_00	173 part, 174-175, 184 part, 188 part, 189-1941, 532	5.22
	3	Goalbathan_144_01	177-178, 179 part, 184-199, 200 part, 206-223, 225 part, 226-237, 240 part, 242 part	28.51
Low Income Housing Area	9	Safipur_161_01	16 part, 18-20, 22-32, 33 part, 35 part, 36-37, 38 part, 124, 126-143, 150-152	33.81
Re-Settlement Zone	2	Janurchala_051_01	53-55, 90, 95-140	35.07
Total				125.8

Commercial Zone

The land used for commercial activities is considered as commercial land use. These activities include the buying and selling of goods and services in retail businesses, wholesale buying and selling, financial establishments, and wide variety of services that are broadly classified as "Business". Commercial land includes established markets and areas earmarked for markets. The commercial zone is intended to provide locations which can function without creating hazards to surrounding land uses. Existing commercial area of the Paurashava is 111.59 acres. If standard of area calculate according to the population for the year 2031, total 379.76 acres commercial land will be needed. But in present situation pure commercial development may not possible that's way more mixed used land (residential-commercial land has proposed. A total 127.32 acres of land has proposed under this category including new area for whole sale maket, Poura Super Market, Katcha Bazar and Super market.

Table 10.4: Proposed facilities for commercial development

Proposed facilities	Ward No.	CS Mouza Name	Plot No.	Area in Acre
Poura Supper Market	7	Chandra_154_03	1499 part, 1508 part	0.61
Super Market-1	2	Chandra_154_01	199 part, 200 part, 201-202, 203 part	2.05
Super Market-2	9	Safipur_161_02	845-847, 849 part	0.48
Katcha Bazar-1	2	Janurchala_051_01	289 part, 290, 292 part, 301 part	1.00
Katcha Bazar-2	3	Goalbathan_144_01	260 part, 261 part, 290 part, 294 part, 295, 296 part, 327, 1005, 1006 part	2.94
Katcha Bazar-3	8	Purbo Chandra_162_00	207 part, 211 part, 247 part, 248 part, 250 part	1.23
Wholesale Market-1	1	Tanglabari_142_00	64 part, 73 part	0.56
Wholesale Market-2	5	Haritakitala_146_02	218 part, 220 part, 221-224, 225 part	3.38
Total				12.25

Mixed Use Zone

Mixed use zones have been recommended to allow some flexibility in development. In a small town like Kaliakair, as the trend shows, an exclusive commercial land use is unlikely to function. Admixture of land uses will allow flexibility of development, instead of restricting development to any particular use. Existing land under this use is 33.07 acres. A total of such 107.43 acres land has proposed under this category. Mostly central area of the Paurashava is under mixed-use zone.

General Industrial Zone

General industries are the Green and Orange A categories of industries as per The Environment Conservation Rules, 1997. The general industrial zone is intended to provide locations, where general industrial establishments can be set up and function without creating hazards to surrounding land uses. In the Paurashava, industries occupied 772.56 acres land including an area for IT Park. For the year 2031 a total of 863.10 acres land should be provisioned according to the standard for industrial development. The study team has proposed not to extend the industrial area. Government already have acquired

around 332 acres of land for development of IT park which is considered under this category as IT based industrial area. A total of 751.14 acres of landhas proposed under this category.

Government Office

Government Office zone covers all kinds of government offices including existing and proposed (e.g. proposed neighbourhood center) in the town. The existing government offices are Upazila Tahsil Office, Upazila Agriculture Office, Upazila Livestock Hospital, PDB Office, Police Station, Post Office, Paurashava Office, Sub-registry Office, T & T Office and Upazila Parisad Office. Existing land under this use is 7.05 acres. For the year 2031, 30 acres land will be needed. Existing administrative area will remain same. The planning team has proposed 41.46 acres of land under this category including a new area.

Table 10.5: Proposed Government office area development

Proposed facilities	Ward No.	CS Mouza Name	Plot No.	Area in Acre
Administration Area	1	Tanglabari_142_00	168 part, 169 part, 170-176	3.00
	3	Sreefaltali_139_00	446-459, 460 part, 461, 467, 480 part, 181-501, 758-759, 765-797, 985, 989-990	24.21
Proupashava Bhaban	3	Goalbathan_144_01	312 part	0.23
Total				**27.44**

Education & Research Zone

Educational & Research zone refers to mainly education & research and other social service facilities as listed in Table-10.5. Mostly educational institutes such as primary school/kindergarten, secondary school, college and vocational training institute are in this group. Existing land under this use 43.35 acres. For the year 2031, about 535.90 acres land will be needed if standard considers for this purpose. Including all educational institution as presented in the following table a total of 396.39 acres of land has proposed under this category.

Table 10.6: Proposed new facilities for educational development

Proposed facilities	Ward No.	CS Mouza Name	Plot No.	Area in Acre
University	3	Goalbathan_144_02	885 part, 886, 890 part, 891-896, 909, 937, 938 part, 966-981, 993, 1077, 1078	22.50
	5	Haritakrtala_146_02	116-121, 185-301, 305-317, 322, 326-327, 329 part	53.91
Technical University	4	Uttar Baktarpur_145_00	85, 86 part, 87, 88 part, 96 part, 97-113, 125-131	57.30
Medical College-1	3	Sreefaltali_139_00	520-529, 534-536, 540-553, 554 part, 560-563, 566-588, 596-600, 602 part, 603-611	14.52
Medical College-2	7	Chandra_154_04	2650-2659, 2672-2691, 2692 part, 2701-2705, 2720 part	35.92
Vocational Training Center	9	Safipur_161_02	874 part, 875-876, 935-953, 966 part, 967-975, 976 part, 986 part	42.56

Proposed facilities	Ward No.	CS Mouza Name	Plot No.	Area in Acre
College-1	1	Kaliakair_054_00	752-761, 767-792, 796-806, 1222, 1268	16.01
College-2	7	Chandra_154_01	108, 109 part, 110-111, 113-116, 117 part	11.07
High School-1	1	Kaliakair_054_00	793-795, 1225-1227, 1234-1243, 1244 part, 1245 part, 1266-1267	5.28
High School-2	2	Latifpur_353_00	136, 139, 141-142, 144 part, 162 part, 163-165, 167	3.03
High School-3	3	Goalbathan_144_02	750-752, 770-772	5.22
High School-4	6	Baro Kalampur_148_02	424 part, 426-427	4.99
High School-5	6	Baro Kalampur_148_02	603 part, 604 part	0.36
	7	Chandra_154_02	520, 521 part, 558 part, 559, 561 part, 562 part, 563-564	5.00
High School-6	7	Chandra_154_01	235-236, 238 part, 240 part, 269 part	4.07
		Chandra_154_03	1357-1370, 1384, 1457, 1458 part	
High School-7	8	Purba Chandra_162_00	25 part, 26, 34, 36 part	4.73
High School-8	8	Purba Chandra_162_00	251 part, 252	3.27
High School-9	9	Safipur_161_01	9 part, 10 part, 47,, 48, 49 part, 50, 51 part, 52 part, 56 part	5.36
Primary School-1	1	Kaliakair_054_00	1513 part, 1516-1521, 1522 part, 1523 part, 1532 part	3.11
Primary School-2	3	Goalbathan_144_02	770 part, 771 part, 777 part, 778, 779 part	1.99
Primary School-3	4	Pachikki_147_00	179 part, 181 part	0.80
Primary School-4	5	Haritakrtala_146_02	232, 233, 234 part, 249 part, 250 part, 340 part, 341	2.02
Primary School-5	5	Dainkini_149_00	65, 87 part	2.11
Primary School-6	6	Baro Kalampur_148_02	482 part, 483, 484 part, 485 part	2.19
Primary School-7	6	Baro Kalampur_148_02	709 part, 710 part, 723 part, 724 part, 725 part, 726 part	2.15
Primary School-8	7	Chandra_154_03	1501 part, 1502-1503, 1506, 1508 part, 1631	2.27
Primary School-9	7	Chandra_154_01	114 part, 183 part, 190 part,	1.93
Primary School-10	9	Safipur_161_02	751-753 part, 756-758, 760-762 part	2.10
Madrasa	6	Baro Kalampur_148_02	376 part, 377 part, 378 part, 382	6.51
Total				322.28

Agricultural Zone

Agricultural land denotes the land suitable for agricultural production, both crops and livestock. It is one of the main resources in agriculture. It includes productive land (single, double and triple cropped), seed bed, fisheries, poultry farm, dairy farm, nursery, horticulture etc. The Paurashava has a vast area of agricultural land that demands formation of a separate zone like, agriculture zone. Agriculture zone is primarily meant

for agriculture; land uses related to it and land uses that support it. Existing total area under agricultural use is 1709.33 acres. After implementation of the Urban Area Plan up to the year 2031, it will be reduced. Only 394.65 acres of land has proposed under this category.

Water body

These will act as water retention areas which include ponds, water tanks, natural khals and irrigation canals. The plan suggests preserving most of these water bodies for two purposes, first, to serve as source of water, second to serve as water retention area during monsoon. The ponds with an area equal to or more than 0.3 acres will be preserved as the water retention ponds. In the Paurashava, total water body is 552.16 and up to the year 2031 it will be 457.30 acres.

Open Space

Open space includes play field/play ground, park, neighborhood park, community forest, tennis ground and open tourism components. At present, 2.72 acres land is under the open spaces. Up to the year 2031, 760.31 acres land under open spaces will be needed. As this area has vas forest area (1295.09 acre) which will meet the demand for open space. So, considering the reality total 250.28 acres of land has proposed under this category.

Table 10.7: Proposed new facilities for open space development

Proposed facilities	Ward No.	CS Mouza Name	Plot No.	Area in Acre
Stadium/ Sports Complex	7	Chandra_154_01	114 part, 117 part, 118 part, 119-122, 123 part, 156 part	9.44
Central Park	7	Chandra_154_01	118 part, 141-142, 143 part, 148 part, 149-155	6.52
Community Park-1	3	Sreefaltali_139_00	719 part, 876 part, 903, 971, 972 part, 977 part	1.46
Community Park-2	3	Goalbathan_144_01	383 part, 384-389, 1086	5.11
		Goalbathan_144_02	513 part, 514, 515 part, 516 part	
Community Park-3	9	Safipur_161_02	816 part, 819 part, 841, 856 part, 858-859	2.56
Playground-1	1	Kaliakair_054_00	1494, 1496, 1537-1541, 1542 part, 1543-1544, 1620	7.63
Playground-2	2	Janurchala_051_01	251, 255 part	1.26
Playground-3	3	Sreefaltali_139_00	518-519, 615-616, 617 part, 619 part, 620 part	2.66
Playground-4	3	Goalbathan_144_02	699, 705 part, 706, 752 part, 753-756, 996-999	3.35
Playground-5	4	Pachikki_147_00	84 part, 211 part, 212 part	1.40
Playground-6	5	Haritakitala_146_02	244 part, 245-247, 249 part, 337 part, 339	1.91
Playground-7	6	Baro Kalampur_148_02	345 part, 355 part, 360 part, 361 part, 362, 363 part	3.40
Playground-8	6	Baro Kalampur_148_02	710 part, 711 part, 712 part	0.80
Playground-9	8	Purbo Chandra_162_00	251 part	2.25

Proposed facilities	Ward No.	CS Mouza Name	Plot No.	Area in Acre
Playground-10	9	Safipur_161_01	11 part, 12 part, 14 part, 15, 49 part	5.38
Total				**55.13**

Circulation Network

Road network including primary, secondary, tertiary and local access road falls under this category. In the Paurashava, 201.10(2.98%) acres land is under regional and local roads. More land will be needed for provisioning proposed roads up to the year 2031. About 10-15% of the total land may be considered for road network. But as this area has vast agricultural and forest area the proposed road network become below the required area. A total of 514.84 (7.64%) land has proposed under this category.

Transportation Facilities

Under transportation facilities, both transport and communication services are considered. This category includes, bus terminal/ stand, filling station, garage, passenger shed, ticket counter, transport office, etc. In the Paurashava, 8.45 acres land is under this use. For the year 2031, 51.27 acres land will be needed according to the standard. Transportation and Communication related services are Bus transport terminal, Truck terminal, Rickshaw / Van / Auto stand, Passenger shed, etc. Considering the real scenario with a proposed Bus Terminal, Truck Terminal with loading unloading facilities, Steamer Terminal, Railway Station, Rickshaw Stand and Tempoo Stand total of 31.74 acres of land has proposed under this category.

Table 10.8: Proposed new transportation facilities

Proposed facilities	Ward No.	CS Mouza Name	Plot No.	Area in Acre
Bus Terminal-1	1	Shemoiltali_141_04	24 part, 27, 29 part	0.80
Bus Terminal-2	6	Baro Kalampur_148_02	443 part, 444 part, 446-449, 454 part	10.36
	7	Chandra_154_01	87-89	1.17
Truck Terminal with loading unloading	1	Shemoiltali_141_04	26 part, 28, 29 part, 32 part	1.11
Railway Station	2	Janurchala_051_02	819 part	0.20
	3	Goalbathan_144_01	366 part, 369 part	2.69
	4	Uttar Baktarpur_145_00	2 part, 3 part	1.07
Tempo Stand-1	1	Shemoiltali_141_01	12 part, 20 part, 115 part	0.27
Tempo Stand-2	1	Shemoiltali_141_01	57 part, 59, 62 part, 63-64, 65 part	0.71
Tempo Stand-3	2	Latifpur_353_00	39 part, 57 part	0.27
Tempo Stand-4	3	Goalbathan_144_01	82-83, 94 part	1.05
Tempo Stand-5	5	Haritakitala_146_02	218 part, 219, 220 part	0.49
Tempo Stand-6	6	Baro Kalampur_148_02	345 part, 354 part	0.66
Tempo Stand-7	9	Safipur_161_01	295 part	0.14
Tempo/Rickshaw Stand-1	3	Goalbathan_144_01	300 part, 316 part, 317 part, 1089 part	0.89
Tempo/Rickshaw Stand-2	7	Chandra_154_01	95 part, 96 part, 104 part	1.37

Proposed facilities	Ward No.	CS Mouza Name	Plot No.	Area in Acre
Tempo/Rickshaw Stand-3	8	Purbo Chandra_162_00	16 part	1.59
Baby Taxi/Rickshaw Stand	9	Safipur_161_01	295 part	0.12
Steamer Terminal	1	Shemoiltali_141_01	40 part, 121 part, 122	0.41
Total				25.37

Utility Services

A number of utility establishments are required in a town to serve the people. Utility services include Overhead Tank, Power Office/Control Room, Public Toilet, Sewerage Office, Waste Disposal, Water Pump House, Water Reservoir, Water Treatment Plant, Waste transfer station etc. A dumping station, water station and Slaughter house, Public toilet, Waste transfer Staion; have proposed under this category with a area of 11.97 acre.

Table 10.9: Proposed new utility services.

Proposed facilities	Ward No.	CS Mouza Name	Plot No.	Area in Acre
Dumping Site-1	2	Janurchala_051_01	90 part, 91, 92 part, 93-94	4.23
Dumping Site-2	9	Safipur_161_01	16 part, 17, 21 part	3.91
Slaugther House-1	1	Shemoiltali_141_02	409	0.49
Slaughter House-2	7	Chandra_154_02	2014 part, 2015 part	0.24
Public Toilet-1	1	Shemoiltali_141_04	32 part	0.07
Public Toilet-2	7	Chandra_154_01	104 part	0.15
Waste Transfer Station-1	1	Shemoiltali_141_04	32 part	0.16
Waste Transfer Station-2	6	Baro Kalampur_148_02	345 part, 363 part	0.73
Waste Transfer Station-3	7	Chandra_154_01	94 part, 104 part	0.28
Water Station	3	Goalbathan_144_02	610 part, 619 part	0.29
Total				10.98

Health Services

The zone of health care facilities is intended to provide locations, where health facilities including upazila health complex and other maternity clinic can be set up and function. Existing land under this use 7.00 acre. For the year 2031, 79.05 acres land will be needed if standard considers for this purpose. With proposed hospital zones total of 74.39 acres of land has proposed under this category.

Table 10.10: Proposed area for health facilities development

Proposed facilities	Ward No.	CS Mouza Name	Plot No.	Area in Acre
Health Center-1	3	Goalbathan_144_01	159 part, 164 part, 165 part, 167 part, 171-174, 253-257, 261-269, 272 part, 273, 276 part, 277-283, 284 part, 290, 986-988,1023-1026, 1045 part	27.62
HealthCenter-2	7	Chandra_154_01	104 part, 105-107, 109 part, 190 part, 192 part, 193-194	7.99
Healh Center-3	7	Chandra_154_04	2492-2493, 2494 part, 2671,	21.18

			2672 part, 2693 part, 2695-2699, 2706-2710, 2711 part	
Total				**56.79**

Community Facilities

All community facilities, including funeral places (i.e. graveyards) and other religious uses denoted as community facilities. At present, 9.99 acres of land is under this category. According to the standard, about 96.23 acres land may be prescribed for community facilities up to 2031. One of the important philosophies of this plan is provisioning compact township development. Based on this concept, the Ward Councilor's Office building may be used including family planning clinic, Union Parishad Office and club. Land for such type of activities is not prescribed in the plan, land allocated for Ward Councilor's Office building, Community Centre, Eidgah and graveyard. A total of 80.12 acres of land has proposed under this category.

Table 10.11: Proposed new community facilities.

Proposed facilities	Ward No.	CS Mouza Name	Plot No.	Area in Acre
Central Mosque & Eidgah	2	Latifpur_353_00	63 part, 66, 69 part, 70 part, 234 part, 238 part, 239-252, 264-266, 267 part, 440-464	15.42
Cremation	3	Sreefaltali_139_00	696-698	0.43
Poura Community Center	3	Goalbathan_144_02	528 part, 529 part, 530 part, 983	1.92
Eidgha-1	3	Goalbathan_144_02	940 part, 941-942, 950-952, 960-965, 1087	9.34
Eidgha-2	9	Safipur_161_02	923 part, 924 part, 931, 934 part	5.00
Graveyard-1	2	Janurchala_051_01	38, 39 part, 48 part, 50-51	2.93
Graveyard-2	2	Goalbathan_144_02	520-524	4.38
Graveyard-3	3	Sreefaltali_139_00	718 part, 719-729, 852-856, 873-875, 876 part	6.13
Graveyard-4	4	Pachlakki_147_00	9 part	2.29
Graveyard-5	6	Baro Kalampur_148_02	616 part, 617-619, 627 part, 628, 629 part, 640 part	1.91
Graveyard-6	7	Chandra_154_04	2694 part	4.21
Graveyard-7	8	Purbo Chandra_162_00	237 part, 251 part	2.00
Graveyard-8	8	Purbo Chandra_162_00	281 part	1.26
Graveyard-9	9	Safipur_161_02	1027 part, 1028-1034, 1036	7.36
Ward Center	1	Shemoiltali_141_04	32 part	0.14
	2	Latifpur_353_00	83 part, 85 part, 86, 88 part	0.42
	3	Goalbathan_144_02	508 part, 509	0.45
	4	Pachlakki_147_00	302 part	0.21
	5	Haritakitala_146_02	158 part, 159 part	0.38
	6	Baor Kalampur_148_02	435 part, 506	0.68
	7	Chandra_154_03	1507 part, 1508 part	0.24
	8	Purabo Chandra_162_00	207 part	0.67
	9	Safipur_161_01	323 part	0.60
Total				**68.37**

Recreational Facilities

It includes area for cinema/theatre. 12.48 acres land is under recreational use in the Paurashava including *"Ansar Camp*". *"Answar Camp"* has considered as open space in the proposal. According to the standard for recreational facilities 17.26 acres of land is being needed up to the year 2031. The study team recommends a total of 7.37 acres of land under this category.

Table 10.12: Proposed area for Recreational Facilities.

Proposed facilities	Ward No.	CS Mouza Name	Plot No.	Area in Acre
Theater-1	1	Kaliakair_054_00	795 part, 1212 part, 1213 part, 1214-1221, 1223, 1224, 1461 part, 1621	4.05
Theater-2	8	Purbo Chandra_162_00	196 part, 207 part, 208 part, 210 part	2.18
Theater-3	9	Safipur_161_01	357-358	0.99
Total				**7.22**

Forest Area

Forest land is a large area covered chiefly with trees and undergrowth. There is around 1316.52 acres of forest which should reserve. Only some important link road and road widening has proposed within this areas. A total of 1292.80 acre of land has proposed under this category. This area may be considered as open space zone.

Overlay Zone

The overlay land uses refer to those uses that are not compatible to the surrounding land uses but, anyhow, they need to stay there and therefore will not be removed. These uses are only sites and not zones, actually. They have local, regional or national importance, though they don't conform to surrounding land uses. No other use except the use of overlay site is permitted in this zone. There is no scope for permitting or conditionally permitting the functions or uses as the zone itself is an overlay. The present and proposed use of the zone will continue until the next zoning regulation is imposed on those specific parcels of land.

There are a variety of overlay zones within the project area. Some of the important types of overlay sites are listed below including the purpose of retaining them are described below.

Environmental Protection Area

Environmental protection overlay areas refer to the areas that need to be preserved protected and manage for their natural resources. The purpose of this zone is to protect the areas of environmentally sensitive, areas critical to the ecosystems.

Graveyard Sites

The sites cover existing graveyards that imposes restriction on building or acquisition of such sites for their religious an emotional value.

Sports and Recreation Sites

Some existing open spaces, water bodies, etc. are delineated as overlay sites in order to protect them in consideration of their future need. These places are meant exclusively for sports and recreation.

Special Use Sites

There are some special use areas that need to be protected. Special and temporary events like, fair, hat etc. may be permitted in this zone. The purpose for delineating this zone is to preserve them and make them be able to render services to the present community and future generations. Plot scheduling for development proposals of Kaliakair Paurashava of different category of land useages are shown in the following table.

Table 10.13: Proposed landuse of the Kaliakair Paurashava

Sl. No	Landuse Type	Area Acre	Percentage
1	Urban Residential Zone	2,094.61	31.08
2	Commercial Zone	127.32	1.89
3	Mixed Use Zone	107.43	1.59
4	General Industrial Zone	751.14	11.15
5	Government Offices	41.46	0.62
6	Education and Research	396.39	5.88
7	Agriculture Zone	394.65	5.86
8	Water Body	457.30	6.79
9	Open Space	250.28	3.71
10	Circulation Network	514.84	7.64
11	Transport & Communication	31.75	0.47
12	Utility Service	11.97	0.18
13	Health Services	74.39	1.10
14	Community Facilities	80.12	1.19
15	Recreational Facilities	7.37	0.11
16	Forest Area	1,292.80	19.18
17	Restricted	105.15	1.56
Total		6,738.96	100.00

Source: Landuse Survey, 2009 and proposed by the Consultant.

10.4 Plan Implementation Strategy

10.4.1 Land Development Regulations to Implement the Landuse Plan

Effective implementation of a plan is the most important part of the planning process. The process of Implementation needs to be carried out with care and efficiency in order to produce best outcomes. This chapter highlights various measures needed to be taken in order to implement the landuse plan proposals.

Implementation of the Landuse Plan depends on successful pursuit of the policies specified in the Structure Plan. Those policies represent a significant challenge face with the responsibility of planning and managing the development of the Paurashava area. However, at present no authority is responsible for planning and managing physical development activities in the Paurashava and no regulation except Local Government (Paurashava) Ordinance, 2009 for controlling physical development. This poses a serious

constraint to the implementation of the Landuse Plan and in fact any other form of development plans.

The factors that have been taken into account in deciding the priority include such things as – the importance of the issue that the policy addresses, its potential impact on the lives of the population, the ease with which it can be implemented, its urgency and its interdependence with other policies.

Prior to introduction of the regulations to implement the landuse plan, legislative involvement is recommended here.

1. To control the air, water, noise and soil pollution, Conservation of Environment and Pollution Control Act, 1995 (Act No. I of 1995) was enacted. In the Paurashava, there is no authority for enforcing the provisions prescribed in the said Act. The pollution related with the implementation of landuse component may be controlled with this Act.
2. Impose control on all type of buildings in the Paurashava according to the setback rule prescribed in the Building Construction (Amendment) Rules, 1996 (Notification No. S. R. O. No. 112-L/96). Building permission for extended areas shall be according to the landuse provision prescribed in the plan. Any permission for building construction, front road width shall not be less than 16 ft. and the construction must follow the Building Construction (Amendment) Rules, 1996.
3. Haphazard development of commercial activities is the general scenario of the Paurashava. It is necessary to impose control on commercial activities provisioned in the Shops and Establishments Act, 1965 (Act No. VII of 1965).
5. In case of man-made canal, regulations prescribed in the Canal and Drainage Act, 1873 (Act No. VIII of 1873) is the best weapon. For the linking of canal with others and river considering drainage facilities the Act may be enforced.
6. For the conservation of archeological monuments or structures or historical development the Ancient Monuments Preservation Act, 1904 (Act No. VII of 1904) may be enforced. Archeological Department of Bangladesh and Paurashava authority through a partnership process may preserve such type of development.
7. To control air pollution due to brick burning with the establishment of brick field, Brick Burning Control Ordinance, 1989 (Ordinance No. VIII of 1989) is the appropriate regulation. The Paurashava authority may enforce this Ordinance with the authorization given by the government to him.
8. To control the medical practitioner, establishment of private clinics and pathological laboratories, the statute named Medical Practice, Private Clinics and Laboratories (Regulation) Ordinance, 1982 (Ordinance No. IV of 1982) was enacted. For efficient enforcement of the Ordinance, the Paurashava authority may execute the Ordinance with the authorization of government.
9. The Paurashava will have to exercise strictly Playfield, Open space, Garden and Natural Tank in Urban Areas Preservation Act, 2000 (Act No. XXXVI of 2000) to some specially important areas like, riverfront and water bodies, drainage channels, low land below certain level, designated open space, etc. Development restrictions are

needed around security and key point installations. The provision of restriction will strengthen the power of the plan to safeguard its development proposals and landuse provisions.

10. The government is authorized for establishment of hat and bazar with the acquisition of land through the statute named Hat and Bazar (Establishment and Acquisition) Ordinance, 1959 (No. XIX of 1959). In case of private hat and bazar, a management body is being empowered through the Bangladesh Hats and Bazars (Management) Order, 1973 (P.O. 73/72). The Paurashava authority is also empowered establishing hat and bazar in his jurisdiction through the Local Government (Paurashava) Ordinance, 2009. Coordination may be framed among the government (Upazila Parishad), Paurashava and private owner for the establishment, development and management of the hat and bazar located in the Paurashava premises.
11. In the Paurashava premises, industrial development is controlled by the Bangladesh Cottage Industries Corporation through Bangladesh Cottage Industries Corporation Act, 1973 (Act No. XXVIII of 1973), Industrial Development Corporation through East Pakistan Industrial Development Corporation Rules, 1965 (No. EPIDC / 2A-2/63/354) and Factory Inspector through Factories Act, 1965 (Act No. IV of 1965). Locational aspects and issuing of trade license is controlled by the Paurashava authority. A joint coordination cell among those four authorities may control the establishment of factories and industries in the Paurashava.
12. In the Paurashava, for rain water harvesting, some specific ponds / tanks will needed to be preserved. A number of derelict tanks may be improved through tank improvement project and in this case Tanks Improvement Act, 1939 (Act No. XV of 1939) will support the Paurashava is regulatory aspects.
13. Except Khas land, a considerable amount of public land in the Paurashava may be identified as fallow land or unproductive land. In regulatory term those lands are considered as culturable waste land and those lands are being fallow during five consecutive years. Those lands may be utilized under the guidance of Culturable Waste Land (Utilization) Ordinance, 1959 (Ordinance No. E.P. XIII of 1959).
14. The Paurashava should raise its efforts on the imposition and realization of betterment fees to raise its income. In this case, East Bengal Betterment Fees Act, 1953 may be enforced.

10.4.2 Implementation, Monitoring and Evaluation of the Landuse Plan

Implementation through Multi-Sectoral Investment Programme: Major infrastructure development works such as primary roads, water supply, drainage, etc., will largely be controlled by Government. Public works requires efficient co-ordination through the Multi-Sectoral Investment Programme (MSIP).

Objective of a Multi-Sectoral Investment Programme (MSIP) will match a list of the development projects with the funding stream necessary to implement them. There are two basic activities that would determine the contents of MSIP. One activity would be to prioritize and schedule the investment projects of all public agencies so they will collectively help to achieve the development goals and objectives of the Landuse Plan.

Second activity would be to analyze the source and availability of fund for the prioritized list of development projects.

Implementation through Action Plans and Projects: Action Plans and Projects will be the implementation plans to solve problems at the local level. Action plans will take a direct approach toward plan implementation with a minimum of research, reports or elaborate planning methods. These projects will be easily identifiable and will require minimum resource.

Implementation through Development Control: Landuse zoning is one of several methods of plan implementation to be considered. In all cases where some form of development, landuse control may be applied; careful consideration requires the following ideologies:

- the purpose to be achieved by the development controls;
- where controls should be applied;
- what aspect of development needs to be controlled;
- what type of development controls are required;
- what degree or level of development control is required;
- who will be affected by the required control;
- who will be affected by the controls and in what manner;
- when the controls should be applied;
- what will be the likely impact of the controls;
- how and by whom will the controls be administered and enforced.

Development control as an instrument of plan implementation may be selectively applied within the Landuse Plan. Development controls would also be varied in intensity and detail to suit the particular circumstances. It is important that they should be clear and easily understood by all parties concerned. Since the entire Paurashava Master Plan 'package' has become statutory, development controls associated with its component plans would also be statutory.

Implementation by Facilitating Private Investment: Another approach that would be taken by government toward plan implementation will be to guide and facilitate investments made by the private sector. Government can achieve this with relative ease and at very low cost by setting up a legal and operational framework, coupled with suitable incentives, to facilitate land consolidation, plot boundary readjustment, efficient layout of plots and provision of local infrastructure by the private sector. The benefits of this approach would be:

- increased efficiently of the urban land market would make, more private land available to urban households;

- would pass much of the development costs for local infrastructure to the private sector and land market mechanisms;
- would increase in land for development without large cash outlays by government to purchase land for development schemes; and
- would keep provision of land for community facilities virtually no cost to government.

Plan Monitoring

The Landuse Plan would simply be tools for guiding and encouraging the growth and development of the Paurashava in a preferred manner. In a rapidly changing urban environment, the Landuse Plan would require to keep up to date. If this is not done, within a few years it will be obsolete. Therefore, it is imperative that the requirement for regular updating of the Landuse Plan be made a legal requirement.

For implementation of the various programme components of the Landuse Plan appropriate administrative measures will have to be undertaken. This will essentially include project preparation and monitoring of their execution and evaluation. For carrying out all these activities appropriate institutional measures are also be needed.

Evaluation

Monitoring and evaluation of ongoing and implemented projects is essential to keep the future course of action on the right track. An ongoing project should be regularly monitored and handicaps identified to enable taking appropriate measures at the right time.

Post implementation evaluation is also needed to take appropriate measures correcting past errors-from project preparation to implementation.

The top level supervision has to be done by a high level supervisory committee headed by Paurashava Mayor, LGED representative and Local Government Ministry. Other members of the committee will be local Ward Councilors, local community leader/social workers and the Town Planner of the Paurashava. The committee will supervise implementation works regularly and issue necessary instructions to expedite the works of implementation.

Co-ordination

A Planning Section of Paurashava should have close interaction with the citizen of Paurashava at large in order to make people aware of the benefits of a good plan and, therefore, their social responsibility to promote plan implementation in one hand and also resist contraventions on the other. A specific interactive cell is recommended to operate in this regard with following responsibilities:

- Provide pre-application advice to residents, consultants and developers about landuse management issues and application procedures for the submission of development applications.

- Enforce planning and landuse management related legislation and zoning scheme regulations.
- Issue of property zoning certificates.
- Investigate and resolve landuse management complaints, illegal landuse and prosecuting contraventions.

Such interactive windows may be opened in various convenient locations to ensure ease of the answers to commonly asked questions may be shown in the internet. Besides, those may be shown in the print and electronic media time to time.

In spontaneous areas, while all out people's co-operation is needed for project implementation; there will also be some elements of negotiation. Negotiation will be particularly needed in case of road widening projects. It will be a crucial task for Paurashava to convince the affected people to give up their land for road use. Efforts should be made to convince the land owners on the ground of enhancement of property value due to road widening. In case people refuse to offer land free of cost necessary arrangements may have to be made for payment of compensation. This process of negotiation will be very critical, cumbersome and time consuming, and therefore, has to be handled with utmost care and patience. The best results can be accrued only by wining people's confidence. In case the authority fails to get peoples co-operation they should exercise power of compulsory acquisition of land. Attempts may be made to engage NGOs / CBOs to work as catalysts in negotiation.

CHAPTER-11

TRANSPORTATION AND TRAFFIC MANAGEMENT PLAN

11.1 Introduction

Transport study provides special attention to urban transportation planning as it greatly influences the location decisions and travel behavior of people, goods and services. Transportation is critical for the efficiency of towns contributing to their productivity and economic growth. A good network of roads and other transportation mode coupled with an efficient transport management system makes substantial contribution to the "working efficiency" of cities and towns and enables them to become catalysts for social and economic development. On the other hand, the impact of a poorly designed urban transport system is manifested in terms of traffic congestion, delays, accidents, high energy consumption, high pollution of the environment and inequitable access to services. A well-planned transportation system results in orderly urban growth, greater use of urban public transport, lower vehicular pollution, and shorter auto trips.

The current chapter of the report is about Transportation and Traffic Management Plan covering its development plan proposals and traffic management up to the year 2031. Transportation and Traffic Management Plan is a part of the second stage of the current plan package. This planning component is based on the framework of the Structure Plan prepared in the earlier phase. The Plan is intended to address those areas of the Structure Plan that are likely to face urban growth during next 10 years, and obviously that includes the existing Paurashava area and its extension areas. The report also gives the objectives of the purpose and the role of Transportation and Traffic Management Plan and its relation with Structure Plan and Land Use Plan.

11.2 Approach and Methodology

A comprehensive transportation study was undertaken to investigate the existing transportation infrastructure, transportation mode and modal share scenario of Kaliakair Paurashava and to estimate the anticipated transportation needs of the town up to the year 2031. Transportation study was conducted to determine the present travel patterns and the characteristics of existing transportation facilities to forecast the future travel demand and develop a transportation plan.

Standard methodology was followed for traffic study in the project area as per the Terms of Reference. A nine hour traffic counting was conducted to assess the traffic volume at the most important traffic point. The Paurashava authority identified 2 different intersection covering two entry/exit links of the Paurashava to conduct transport survey. The selected intersections for traffic survey is given below at table 11.1.

Table 11.1: Selected Intersections for Volume Count Survey

Name of Intersection	Link name(Survey station)
By-pass Bus Stand Intersection: 01	By-pass Bus Stand to Paurashava
Old Bus Stand Intersection: 02	Old Bus Stand to Gazipur/Dhaka
	Old Bus Stand to Tangail
	Old Bus Stand to Bazar Road

Source: Transportation Survey, 2010

Bus and tempo fleet data were collected from local transport owners' offices like, Bus Owners' Association, Tempo Owners' Association. They also provided information about routes, trips and movement data. Information about bus station and tempo station were collected from the respective owners' associations and the Paurashava/District Administration. Year wise data of non-motorized traffic were collected from the Kaliakair Paurashava, where these vehicles are registered.

Data on road pattern and condition of roads with their problems and road width were collected from the physical feature survey and verified through field visit. Data on household mobility were also collected from socio-economic survey of the households. Information on road ownership was collected from the Paurashava, LGED and RHD. The same sources also provided information about future road projects in and around the town. Information about traffic conflict and accident were collected from the field and from Thana (police station). Mapping of major roads was done using physical feature survey data and by thorough reconnaissance survey of roads. By considering the planning standard and analyzing the demand, Taffic and transportation plan were made.

11.3 Existing Conditions of Transportation Facilities

11.3.1 Roadway Characteristics and Functional Classification

The planning area covers 27.27 sq. km. and road/ circulation network length is 399.77 km. The Dhaka-Tangail highway runs through the Paurashava and links a number of Connector Roads and Access Roads and these are the main arterial road of the planning area. It provides connection with Kaliakair Paurashava to the north Chittagong and Dhaka.

The roads of the Paurashava belonging to number of agencies named Roads and Highways Department (RHD) responsible for Regional Highway, Local Government Engineering Department (LGED) responsible for construction and maintenance of Upazila and Union roads and Kaliakair Paurashava responsible for construction and maintenance of roads within the Paurashava area. Existing transportation system is dominated by road network catering to the passenger service and freight transport.

Dhaka-Tangail Highway; at Old Bus Stand Intersection, Kumudini Hospital Road and Tangail By-pass Road passes through the Paurashava. The Hospital Road and the Bazar Road attracts traffic from its surroundings to a great extent mainly for official and commercial purposes. The development of this Paurashava is mainly concentrated along with the both sides of these two major roads allowing the linear development.

Total length of Pucca (bituminous carpeted) road is about 83.49 km. The semi Pucca road is generally constructed with brick soling called Herring Bone Bond (HBB) road. Total length of Semi-Pucca road is 91.83 km. Third category is Katcha road called earthen road. Total length of Katcha road is 24.53 km coursing 49.13 sq. km of land. In total, there in Kaliakair Paurashava roads under three categories coursing 199.89 km in length.

Table 11.2: Road network of Kaliakair Paurashava

Type of Road	Length (km)	Percentage (%)
Pucca	83.49	41.77
Semi-pucca	91.83	45.94
Katcha	24.57	12.29
Total	**199.89**	**100**

Source: Field Survey, 2009

Motorized and non-motorized vehicles are operated in all the nodes of the planning area. The non-motorized vehicles are mainly operated within short distance and meet the local needs. The motorized vehicles are mostly intercity passenger buses and trucks, mainly carry agro product.

11.3.2 Mode of Transport

People choose different modes for different purposes. An analysis has been done to find out the characteristics of modal choice by trips makers based on their destination. It is found that for work/personal business 30.6% trips are made by truck, 18.4% by bus, 8.2% by car/pickup/jeep/microbus, 10.2% by auto rickshaw/tempo, 10.2% are by rickshaw/van, 4.1% by bicycle and 14.3% trips are made by other means. For school and college, rickshaw and bicycle are used as main transport mode. For shopping purpose, 46.2% trips are made by rickshaw and 30.8% trips are made by motorcycle. For social/recreational/sports, main transport modes are bus, car/pickup/jeep/microbus and motorcycle. To come home 47.7% trips are generated by rickshaw and 33.3% trips are made by auto rickshaw/tempo. Mixed types of modes are used for miscellaneous purposes.

11.3.3 Intensity of Traffic Volume

Traffic volume studies are conducted to determine the number, movements and classifications of roadway vehicles at a given location. These data help to identify critical flow time periods and determine the influence of large vehicles on vehicular traffic flow, or document traffic volume trends. The counted traffic data for different intersections as well as for different links at different time period and the generated PCU is presented in the following paragraphs.

Depending on the location and landuse around that location, traffic flow varies over different hours of the day. In this context, peak hour traffic flow has a special meaning. Depending on the landuse and socio-economic characteristics of the Paurashava, there could be 1 or 2 more peak hours in a day. Sometimes this peak hour could cover periods which are more than one hour. Highest peak hour traffic is usually taken in to account in determining the adequacy of the road section i.e. to determine whether the road section

gets congested at certain hours of the day. Traffic flow survey has been carried out in selected intersections of the study area and the findings are presented in the following paragraphs.

Intersection 01: By-pass Road Bus Stand (Dhaka-Tangail) to Paurashava

The by-pass bus stand is situated at the intersection on Dhaka-Tangail Highway. At that intersection there is no ticket counter on the roadside and buses are available. The bus stand is connected with Paurashava office and main market area by a link road. Traffic volume survey has been conducted on this connected road. It is seen that on Haat day the number of traffic coming to the by-pass bus stand ('In' direction) is as same as the number of traffic going to the market area ('Out' direction) through that particular link road. In the Haat day, average traffic volume per hour in both direction ('In' and 'Out') on the road is 494 of which 409 is NMV (Non-Motorized Vehicle). So the contribution of MV (Motorized Vehicle) is not so much in the Haat day. Among the MVs, the contribution of motorcycle is dominating. On the other hand, there is a high contribution of rickshaw and bicycle in the composition of non-motorized vehicles. Traffic volume is higher from 10 am to 2 pm than any other times of the day. So 10 am to 2 pm is the peak hour for Haat day.

Intersection 02: Old Bus Stand

Presently, 'Old Bus Stand Intersection' is found the most significant intersection in Kaliakair Paurashava from every consideration. This intersection comprises 3 segments where the 'traffic volume survey' has been carried out. These segments are:

- Old Bus Stand to Gazipur
- Old Bus Stand to Tangail
- Old Bus Stand to Bazar

Most of the traffic flows use the Old bus stand to Gazipur segment on Haat day and similar traffic flow on both Haat day and non Haat day. Intersection 1(including 3 links or segments) is main entrance to the Kaliakair Paurashava and naturally it accommodates major share of traffic to 'From and To' the Paurashava. Main flow of traffic operates on the 'Old bus stand to Gazipur Road' and 'Old bus stand to Tangail road' by the people who come from the outside of the Paurashava and other side of the Tangail Highway. On the haat day 736.48 PCU vehicles use this road (Old bus stand to Gazipur Road) within the surveyed time 7am to 8pm. Second important segment is 'Old bus stand to Tangail road' which averagely accommodate 689.04 PCU vehicles on haatday and 662.96 PCU vehicles on non haat day. Rest of the segment is '**Old bus stand to Bazar road**", which has lowest average traffic volume on both haat day and non-haat day.

Hourly volume of traffic flow (in PCU) is high from 8am to 12 pm on segment 1 that is old bus stand to Gazipur road. The traffic flow for segment 2 that is old bus stand to Tangail road increases between 10 am to 1 pm and 5 pm to 7 pm as it is comparatively more important road in the Paurashava. For segment 3 which is old bus stand to Bazar road, the hourly traffic flow is slightly low than other segments. For this segment, traffic volume is high on non haat-day between 9 am to 3pm. For all the segments, the use of

non motorized transport comprised of Cycle rickshaw and bicycle is more prominent than motorized transport and shares about 70-80% of the total PCU values of each segment's hourly traffic volume. Among non motorized vehicles both truck and bus have significant contribution along with car, auto rickshaw and motorcycles.

11.3.4 Level of Service: Degree of Traffic Congestion and Delay

Speed and delay survey is used to determine speed variations along a route at different times; number, location, cause, frequency and duration of delays, and overall speed and travel time along a route.

As traffic congestion is not very severe in Kaliakair Paurashava, generally delay of traffic movement is not common here.

These studies are used to determine speed variations along a route at different times; number, location, cause, frequency, duration of delays, overall speed and travel time along a route. Non-motorized vehicles like rickshaw, van and pushcart, waits at major intersection with a stoppage time on an average of 5 minutes. Those buses have 36 to 40 seats available for the passengers but they used to carry standing passengers.

The Origin-Destination (O-D) survey is conducted to collect information on travel and transportation generated between zones of a study area. The study also identifies passenger movements where and when trips are originated and ended.The following table-11.3 describes the trips different modes from the origin of trip to the destination of Hat day and non-Hat day in Kaliakair Paurashava.

Table 11.3: O-D matrix of surveyed trips (in %)

Origin	Destination								
	Kaliakairr	Tangail	Modhupur	Joydebpur	Kaliakair	Savar	Dhaka	Narayonganj	Pabna
Kaliakair	89.04%	5.48%	0.00%	1.37%	1.37%	1.37%	1.37%	0.00%	0.00%
Tangail	66.67%	0.00%	6.67%	0.00%	0.00%	13.33%	13.33%	0.00%	0.00%
Gazipur	100.00%	0.00%	0.00%	0.00%	0.00%	0.00%	0.00%	0.00%	0.00%
Kaliakair	100.00%	0.00%	0.00%	0.00%	0.00%	0.00%	0.00%	0.00%	0.00%
Savar	66.67%	0.00%	0.00%	0.00%	0.00%	0.00%	0.00%	0.00%	33.33%
Dhaka	80.00%	20.00%	0.00%	0.00%	0.00%	0.00%	0.00%	0.00%	0.00%
Narayonganj	50.00%	50.00%	0.00%	0.00%	0.00%	0.00%	0.00%	0.00%	0.00%
Average	78.91%	10.78%	0.95%	0.20%	0.20%	2.10%	2.10%	0.00%	4.76%

Source: O-D survey, 2009

The data shows that people of Kaliakair Paurashava have high percentage to travel from their own residence to the surrounding urban areas rather than attract people to come in that area. In most cases people are traveling to Dhaka town to attain their requirements and their second priority has found as Narayanganj.

11.4 Analysis of Existing Deficiencies

11.4.1 Roadway Capacity Deficiencies

Primary Road: he following three are the primary road of the Paurashava. But all of them are not acccourding to the standerd. Road standard (ROW) recommended in the is 80-150 feet, proves that the standard (ROW) of the existing primary road in the Paurashava is enough.

Table 11.4: Important roads in the Kaliakair Paurashava

Sl No	Name of Road	Avg. Width (feet)	Length (km)	Avg. RL (m)
1.	Dhaka-Tangail	20.00	3.18	11.87
2.	Tangail-Gazipur	16.00	0.37	12.03
3.	Dhaka-Tangail by-pass Road	12.00	1.82	12.43

Source: Physical Survey, 2009.

On the other hand; Hospital road, Kaliakair bazaar road, College road, Thana road, Garail road and Paurashava road are maintained by Local Government Engineering Department (LGED).

Secondary Road: Hospital road, Kaliakair bazaar road, College road, Thana road, Garail road and Paurashava road are the major secondary roads of the Paurashava. Recommended Road standard (ROW) 60 feet to 80 feet, proves that the standard (ROW) of the existing secondary roads in the Paurashava is lower than the standard (ROW) recommended. Moreover, in hat day and non-hat day, considering highest volume of traffic flows on those secondary roads is there is no deficiencies regarding the capacity of those secondary road exits at present.

Tertiary Road: Recommended standard (ROW) for tertiary road is 20 feet to 40 feet, proves that the standard (ROW) of the existing tertiary roads in the Paurashava is lower than the standard (ROW) recommended.

Access road: Road standard (ROW) recommended for access road is 20 feet to 40 feet. in the Paurashava, all access roads are less than 12 feet and most of them are using as footway. Non-motorized vehicles named Van sometimes use those walkways. No deficiencies regarding the capacity of those access road exits.

11.4.2 Operational, Safety, Signal and other Deficiencies

- Traffic management system is absent in the Paurashava. No operational system yet being imposed on traffic movement.
- Due to the minimum PCU/hr. both in hat and non-hat day, availability of non-motorized vehicles and absent of available built-up area, road safety exists naturally in the Paurashava.
- Traffic signaling system is totally absent in the Paurashava. Generally, traffic signaling system will not be needed up to the limit of the planning period. On some specific point of primary and secondary roads, traffic signaling will be needed.

11.5 Condition of other mode of transport (Rail/Water)

Rail way is available at some wards of Kaliakair Paurashava. The railway crosses the Paurashava at Ward 3, 4, 6, 7, 8 and 9. The length of railway of this Paurashava is 8.7 km.

Turag River opens a huge opportunity for water transportation in Kaliakair Paurashava. Trawlers and boats are frequently used for transportation.

11.6 Future Projections

Road design standards are prescribed in the section 21 of the Public Roads Act, 2004. The Government may declare design standards for roads by publication in the Official Gazette. The road design standards shall set out design requirements for roadways and road-related areas including structures located on roadways or road-related areas.mA road authority shall comply with the road standards when carrying out works on a roadway, road-related area or when installing, modifying or maintaining a structure on a roadway or road-related area. The Urban Area Plan for Dhaka City has recommended road standards with the consideration of traffic volumes, which were not undertaken in conjunction with the Dhaka Integrated Transport Study (DITS). A wide range of standards was suggested for various classes of roads, ranging from 4 meters to 24 meters, as mentioned below. The required right of way (ROW) is also indicated:

- Main Road 24.0 meter (78 ft) ROW
- Arterial Road 14.5 meter (47.5 ft) ROW
- Collector Road 13.0 meter (42.6 ft) ROW
- Access Road 9.0 meter (29.5 ft) ROW
- Access Road 6.0 meter (19.7 ft) ROW
- Non-motorized Road 4.0 meter (13.4 ft) ROW
- Footpath 2.5 meter (8.2 ft) ROW

In order to promote development of all roads in a systematic manner, new road standards were recommended for both built up areas, as well as for less built-up areas. The standards, when adopted will facilitate earmarking the right of way (ROW) for all major roads. The details of standards used in this plan are indicated below.

Table 11.5: Road standards for future development of the network

Class of Roads	Standards recommended
Paurashava primary roads	120-80 ft.
Paurashava secondary roads	80-40 ft.
Paurashava local roads	40-20 ft.

Source: UTIDP, LGED, 2010.

11.6.1 Travel Demand Forecasting for Next 20 Years

Existing road network is quite enough for accommodating present volume of traffic. The study area is rural in nature. Katcha roads needs to be constructed as pucca or at least semi-pucca. Katcha roads become clayey in the rainy season and bring immense sufferings for the users. As a result, social, cultural and economic activities are disrupted significantly at that time. A very limited uses of small boats are found for transportation of goods within the short distance particularly on hat day. Due to the absence of effective alternatives, passengers and goods movement of the study area is largely dependent on road transportation. This dependency will be calculated according to the increase of accessibility, consideration of the missing links, volume of traffic movement, bulk density of the area and economic importance of the area. Growth direction is also a considerable component for the demand analysis of the road.

11.6.2 Transportation Network Considered

The physical feature survey has identified a number of problems constraining the development of the Paurashava, such as:

- Lack of a hierarchy of roads within the Paurashava with many of the roads unable to fulfill their intended functions adequately;
- Scarcity of reserves of land for future roads; and
- A tradition of encroachment in those areas where road reserves have been made.

To establish a rational hierarchy of roads in the Paurashava, it will be needed to use development control to ensure that reserves of land, once established are maintained.

In the Transportation Plan, north, south, east and west direction links with the Paurashava have been considered. To maintain an effective linkage, the plan proposes one primary road and others are secondary and tertiary roads.

11.6.3 Future Traffic Volume and Level of Service

The roads presented in the Table-11.3 are the important roads of the Kaliakair Paurashava. Present population of the Paurashava is 71362 (2011) and in the year 2021 it will be 86977. Highest PCU/hr. at hat day is 1394 and non-hat day is 745 in Ibrahimpur road. The scenario proves that traffic congestion is not alarming will in other roads but in Ibrahimpur Road in hatbar it becomes alarming as the PCU/hr. increased above 1000. The income and other socio-economic condition of this area is very poor. The scenario proves that the Paurashava dwellers have no capability to increase traffic volume provisioning motorized vehicles. They will increase non-motorized vehicles and Nosimon.

With the expansion of administrative services, motorized public vehicles will be increased and at the sametime, traffic volume also.

At present, all of traffic is under the private sector and above 80% people enjoying by the non-motorized vehicles. It is expecting that the scenario will change next 20 years and the percentage of motorized vehicle will increase.

11.7 Transportation Development Plan

11.7.1 Plan for Road Network Development

For an efficient road network development, implementation of some of the recommendations made by the Roads and Highways Department in 2008 would be essential. In order to serve the Paurashava, as well as the local traffic around Paurashava, an analysis will present in the proposals. It is found that many of the roads are not well linked and there are some missing links. Further analysis under the Transportation Plan will be revealed that most of the links suggested by this study are infect required to be developed in a phased manner. Under the Transportation Plan, an attempt is being made to promote existing major link roads in the Paurashava which. The northern part of the study area is in rural character and have limited road linkage wth the central area. There is a need of some north south and east-west link road.The connection with national

highway with Paurashava secondary road is not enough. Considering of the above scenario the road network plan has made.

11.7.2 Road Network Plan

The primary road will act as through-route, taking traffic from Paurashava to other centres in the region or the country and avoiding the need for this through-traffic to enter the internal road network of the Paurashava. The route is intended to be high capacity and fast flowing. In the case of existing roads in Paurashava (designated as secondary and tertiary roads), this may require the introduction of side collector roads which restrict entry onto the main carriageways from roadside development. Without this, the road may not be able to fulfill the given function. The following road are proposed for improvement with sufficient ROW and pavement width.

Table 11.6: Proposed road for improvement with sufficient ROW and pavement width.

Sl No.	Name of Road	Existing Avg. Width(feet)	Proposed Width(feet)	Road Type	Remarks
1.	Dhaka-Tangail	20.00	100	Primary Road	-
2.	Tangail-Gazipur	16.00	100	Primary Road	
3.	Dhaka-Tangail by-pass Road	12.00	60	Primary Road	More widening not possible

Source: Physical Feature Survey, 2009

On the other hand; Hospital road, College road, Thana road, Garail road and Paurashava road are proposed for widening of 40 feet.

New Link Roads

Some major new north south and east-west link roads and a major link road parallel and adjecet to existing railway has proposed for road network development.

Improvement of other local roads

Improvement of other local roads which deserve priority attention and could contribute a lot in reducing pressure on the existing focal points of the Paurashava all tertiary road is essential all local roads has proposed for widening.

An initiative should be taken to develop an effective and efficient arterial road network, which could provide a gridiron system with lots of alternative links for movement in different directions.

Map 11.1: Important Roads of Kaliakair Paurashava

11.7.3 Proposal for Improvement of the Existing Road Networks

Use of road reserve is the initial stage for improvement of existing **primary road**. The maximum recommended reserve width for a primary road that will be adopted and maintained is 48 meters; with an initial basis the extremities of the reserve being 24 meters on either side of the road centre line. This may vary, especially on existing roads, due to localized circumstances.

Alternative cross-sections for the primary road is –

- a primary road with no collector roads (22 meters);
- a primary road with a collector road on one side only (32 or 35 meter);
- a primary road with collector roads on both sides (42, 45 or 48 meters).

Regardless of which option is required, initially the full 48 meter reserve will be applied, although not necessarily purchased in the first instance, until such time as more detailed site investigations have been undertaken.

For new road, the 48 meter reserve will be adopted in the short-term to prevent development encroaching in to it before construction of the road.

Within the established reserve, no further non-road related development will be permitted, with the exception of utility networks. The utilities should not fall under the main carriageways due to the disruption to traffic flows when the system requires repair or maintenance. Localized drainage channels should, where possible, also fall within the road reserve, preferably under the footpath or hard shoulder to reduce land requirements. If, however, this is not possible an additional reserve to cover the drainage channel will be required, increasing the overall width of the reserve.

Permanent structures that currently fall within the reserve should be permitted to remain until such time as they are redeveloped. Redevelopment of existing properties should fall wholly outside the reserve. Temporary structures should not be permitted even on a short-term basis. Existing structures should be removed as and when feasible.

For new roads, where reserves have been identified but implementation is unlikely to commence for a number of years, agricultural use of the land within the reserve should be permitted until such time as the land is required for construction. No structures, of whatever materials, will be permitted within the road reserve.

No direct access should be allowed onto the main carriageways (of primary road). Access should be gained only at controlled junctions–roundabouts or traffic-lights. The number of junctions or intersections should be minimized with desired spacing being not less than 500 meters.

Primary road with secondary roads should be provided in areas where there is considerable roadside development. These should generally be two-way service roads and will be used by non-motorized vehicles like rickshaw, van, pushcart and bullock carts including pedestrians. Controlled parking will be permitted where necessary.

Where secondary roads will not be required either immediately or in the long-term, the full reserve should be maintained (for utilities, etc.) unless there is clear reason why these reserves should be decreased.

Functions of the **secondary roads** is to act as –

- links between the Paurashava and primary roads;
- links between various important nodes of activity within the Paurashava.

The secondary roads are also intended to be high capacity routes, although their design speed will be significantly less than primary roads due to their being a far higher percentage local, inter-Paurashava traffic movements rather than intra-Paurashava. On many occasions within the Paurashava, existing routes will require the provision of tertiary roads to provide access to shop frontages and on-street parking for those shops. The tertiary roads also serve to collect traffic which currently enters at random from side streets.

The maximum recommended reserve that will be adopted and maintained for secondary road is 48 meters, preferably with the extremities of the reserve being 24 meters either side of the road centre line, although this may vary especially on existing roads due to localized circumstances.

Regardless of which option is required ultimately, initially the full 48 meter reserve should be applied until such time as a more detailed site investigation has been undertaken and the actual reserve required has been defined.

No non-road related development will be permitted within the road reserve. For new roads which will not be constructed in the foreseeable future, agricultural use of the reserve will be permitted until such times as the road is constructed. No permanent or temporary structure will be permitted.

In general, no direct access will be permitted onto the main carriageways (of secondary roads) with access gained only at controlled junctions. Occasionally, due to existing situations, access from a side road may be entertained. The number of junctions should be minimized with desired spacing being at 200 meter intervals. Again, this may vary according to necessity but where deviation from this desired spacing is necessary, the deviation should be small. Junctions will be in the form of roundabouts or traffic lights.

Limited direct access will be allowed from major traffic generators such as Paurashava Office complexes, factories and shopping centres where no other alternative access arrangement is feasible. Car parking arrangements for those large landuses must be provided on off-street.

Functions of the **tertiary road** are:

- collect and distribute traffic to and from access roads from predominantly residential areas to other parts of the hierarch;
- provide direct access to roadside landuses.

The recommended reserve for tertiary road is 18 meters, 9 meters either side of the centre line. On-street parking may be permitted.

No development will be permitted within the 18 meter reserve.

Direct access will be permitted although major generators should be required to have off-street parking areas. Junctions should be a minimum of 150 meters apart.

Access roads provide access to residential areas and properties therein. On-street parking is permitted providing that this will not block the access road.

Recommended reserve for access is 10 meter, although in existing situations, a minimum reserve of 6 meter will be entertained.

Junctions and access roads should be a minimum of 50 meters apart, although deviation to this will need to be accommodated in existing areas.

Direct access from residential properties will be permitted. Considering the overall scenario and road improvement options the proposed road with for bhuapur Paurashava are as follows:

Table 11.7: Recommanded road standards

Sl.No.	Class of Roads	Standards recommended
1.	Primary Road	80 feet and above
2.	Secondary Road	40-60 feet
3.	Tertiary road/ Local Road	30 feet
4.	Access Road	20 feet

11.8 List of Proposed New Roads

A number of new roads including improvement of existing roads are presented in the following table. All the roads may be constructed under the road development scheme approved by the government for the authorities named RHD, LGED and Paurashava. In total, 199.89 km a road existing in the Paurashava and A total of 128.02 km road has proposed for road network development of which 24.21 km are new and 103.81 km are for widening for efficient accessibility of the Paurashava which are shown in **ANNEX-D.**

The process that the Paurashava/RHD can undertake to establish new road reserves for each of the proposed roads shown on the Transportation and Traffic Management Plan is described below:

- Initial step will be to determine two points between which the new road will be required. In certain instances, the precise intersection or connection point will be obvious, whilst in other cases only a generalized location is identifiable in the first instance. Determination of the exact connection points can only be made once further steps in the process have been undertaken.
- Having identified two connection points (either known or vague), next step will be to conduct a search of a wide area to identify a number of alternative routes. Width of the area subjected to this search will vary according to individual circumstances, with

the area being relatively narrow in dense Paurashava locations (say 80 to 100 meters), but wider in more rural settings (say 200 to 300 meters).

- The number of alternative alignments to be identified will also vary, but as a general rule, a maximum of five alignments will be chosen. When identifying each of the different alignments, care will be taken to ensure that they are realistic and capable of accommodating the width of reserve required for the standard of road envisaged.

Table 11.8: List of proposed new roads

Sl No	Road Width (Feet)	Length (Km)	Percentage	Type
1	120	10.16	7.91	Primary road
2	80	1.87	1.46	
3	60	10.96	8.53	Secondary road
4	40	51.22	39.86	
5	30	43.25	33.65	Tertiary road
6	20	11.05	8.60	
Total		128.51	100.00	

During this stage of the process, number of buildings, other structures or natural environment affected by the proposal should be seen as a constraint, but not yet as a major constraint. That being said, following the rule for realism stated above, the alignments will need to respect as much existing permanent development as possible, aiming instead, in dense situations, to target gaps between developments rather than through them. Only where the avoidance of specific buildings or groups of buildings is unavoidable, to produce a worthwhile alignment, should their removal be seen as part of that alternative's cost.

Similarly, in rural locations or in areas of high natural environmental quality, extreme care should be exercised when choosing the alternatives to respect the natural environment and choose options that are going to minimize the visual impact of a new road or avoid destruction of areas of the highest environmental quality.

Having established the alternative alignments, these will now be assessed, against set criteria to enable the Paurashava to choose a preferred option. The criteria that must be taken into account during this exercise include:

The impact of the alternative on existing properties: whether these are permanent or temporary and the type of development that is being affected. This, in part, will identify the general scale of compensation that will accrue with each of the alignments and therefore the viability of a route to be chosen as the preferred option.

Map 11.2: Proposed Circulation Network for Kaliakair Paurashava

The impact that each alignment will have on the general and natural environment: Routes which have a high visual impact in an area of natural beauty will, for example, score badly on this criteria.

Amount of vacant public land available along each route: more land the government owns, the easier the project will be to implement and equally the lower the cost of an option, as the need to compensate landowners will be reduced.

The ease of construction: each alignment will need to be considered with again easier solutions not requiring major development items – bridges – for example, being preferred to more difficult proposals which will increase the cost of construction.

The severance of landuses and communities: need to be assessed, with preference been given to those routes that minimize severance.

Other more localized criteria may be included at the time of assessment.

- The result of this assessment exercise will identify for the Paurashava the route that should be considered as its preferred alignment. The reserve for this alignment will then become the area within which no development, other than for agricultural use, will be permitted.

11.9 Plan for Transportation Facilities

11.9.1 Transportation Facilities Plan

Transportation facilities and services include Bus Terminal, Bus Stoppage with Shade, Ticket Counter, Waiting Place for Travelers, Parking Space for Motorized and Non-motorized Vehicles, Service Centre and Washing / Toilet Facilities. At present, no formal transportation facilities and services are available in the Paurashava. For the year 2031, 51.27 acres land will be needed according to the standard. Transportation and Communication related services are Bus transport terminal, Truck terminal with loadind unloading, Rickshaw / Van / Auto stand, Passenger shed, etc. Considering the real scenario with a proposed Bus Terminal, Truck Terminal with loading unloading facilities, Steamer Terminal, Railway Station, Rickshaw Stand and Tempoo Stand total of 32.30 acres of land has proposed under this category.

Table 11.9: Proposed new transportation facilities

Proposed facilities	Ward No.	CS Mouza Name	Plot No.	Area in Acre
Bus Terminal-1	1	Shemoiltali_141_04	24 part, 27, 29 part	0.80
Bus Terminal-2	6	Baro Kalampur_148_02	443 part, 444 part, 446-449, 454 part	10.36
	7	Chandra_154_01	87-89	1.17
Truck Terminal with loading unloading	1	Shemoiltali_141_04	26 part, 28, 29 part, 32 part	1.11
Railway Station	2	Janurchala_051_02	819 part	0.20
	3	Goalbathan_144_01	366 part, 369 part	2.69
	4	Uttar Baktarpur_145_00	2 part, 3 part	1.07
Tempo Stand-1	1	Shemoiltali_141_01	12 part, 20 part, 115 part	0.27
Tempo Stand-2	1	Shemoiltali_141_01	57 part, 59, 62 part,	0.71

Proposed facilities	Ward No.	CS Mouza Name	Plot No.	Area in Acre
			63-64, 65 part	
Tempo Stand-3	2	Latifpur_353_00	39 part, 57 part	0.27
Tempo Stand-4	3	Goalbathan_144_01	82-83, 94 part	1.05
Tempo Stand-5	5	Haritakitala_146_02	218 part, 219, 220 part	0.49
Tempo Stand-6	6	Baro Kalampur_148_02	345 part, 354 part	0.66
Tempo Stand-7	9	Safipur_161_01	295 part	0.14
Tempo/Rickshaw Stand-1	3	Goalbathan_144_01	300 part, 316 part, 317 part, 1089 part	0.89
Tempo/Rickshaw Stand-1	7	Chandra_154_01	95 part, 96 part, 104 part	1.37
Tempo/Rickshaw Stand-1	8	Purbo Chandra_162_00	16 part	1.59
Baby Taxi/Rickshaw Stand	9	Safipur_161_01	295 part	0.12
Steamer Terminal	1	Shemoiltali_141_01	40 part, 121 part, 122	0.41
Total				25.37

11.9.2 Parking and Terminal Facilities

Bus stand and intersections are using as bus stops including loading and unloading of man and materials. Those intersections are also using for parking both motorized and non-motorized vehicles. Informal economic activities also often encroaches road space. All those factors are together resulted in traffic congestions and also for a cause of accident. The proposed truck terminal will include the parking area and loading and unloading facilities.

11.9.3 Development of Facilities for Pedestrian, Bicycle and Rickshaw

People of the Paurashava move using both sides of the roads. It is noted that the Paurashava is without any footpath for pedestrian movement. Pedestrian movements take place mostly on carriageway and right of way of the roads.

According to the standard for provisioning of footpath, 2.5 meter is necessary and it will be demarcated on both the sides of the road. Development of facilities for pedestrians, bicycles and rickshaws is relevant with the design criteria of the road.

11.10 Waterway Development / Improvement Options

There is a option for water way develop wih Dhaka city as the river turag flows towards north-west side of the Paurashava.

11.11 Proposal for Improvement of the Existing Waterway

Existing water way may improve with providing a ghat.The planning team has proposed a steamer ghat on the bank of the river. The concern authority/BIWTA may prepare detail plan for development of waterway.

11.12 Proposal for New Waterway Development

- Encourage private sector to develop a water ways. BOT (Build Operate and Transfer to the Government) system for private sector will appropriate.

- The Paurashava may, in collaboration with the Bangladesh Inland Water Transport Authority (BIWTA), develop the water ways.

11.13 Railway Development Options

There is no railway station but have railway line. Considering real scenario and link with Dhaka city the planning team has proposed a railway station for this area with an area of 3.96 acres of ward 2, 3 and 4.

11.14 Transportation System Management Strategy (TSMS)

11.14.1 Strategies for Facility Operations

Following strategies will be adopted to operate the facilities related with the provisioning of suitable transportation system.

- An improved traffic management system should be imposed. All facilities involved with this system should be provisioned.
- The land uses at the intersections should be controlled with the provisioning of passenger shade, public toilet, ticket counter, tea stall and other necessary facilities.
- Parking facilities for motorized and non-motorized vehicles should be provisioned during construction of roads.

11.14.2 Strategies for Traffic Flow and Safety

Following strategies will be adopted to implement circulation network in the planning area:

- A comprehensive road network plan has been prepared for the Paurashava using a hierarchy of road network. Implementation will also be followed following this hierarchy.
- In case of local roads a participatory approach will be developed to realize at least a part of the development cost bears by the beneficiaries. This will also help to reduce delay and cost involved in land acquisition for road construction.
- Proposed roads in those areas will be chosen for immediate construction that is needed to promote growth in that area.
- Incremental Road Construction Approach will be adopted to get rid of unnecessary construction costs, where roads remain underutilized.
- Service roads will be constructed along with the major roads to allow free flow of long distance traffic.
- A restricted buffer zone will be created along primary roads passing through agriculture to discourage roadside development.

Map 11.3: Proposed Transport Infrastructure of Kaliakair Paurashava

11.14.3 Strategies for Traffic Management

- Linking the missing links of primary, secondary and tertiary roads on priority, and widen some tertiary roads to make networks for efficient circulation.
- Provide adequate pedestrian facilities and off-street parking wherever needed.
- Not to allow any development within the right of way (ROW).
- Separate lane for non-motorized vehicles should be provisioned on the primary and secondary roads.

11.15 Plan Implementation Strategies

11.15.1 Regulations to Implement the Transportation Plan

Following regulations will be needed for implementation of the plan.

Public Roads Act, 2004: Objectives of the Public Roads Act, 2004 is prescribed in the section 2. Those objectives are to:

a) establish ownership and responsibilities for roads;
b) establish the framework for managing the road network;
c) establish general principles for road management;
d) provide for general design and planning principles for roads;
e) confer powers and responsibilities on road authorities;
f) commit road authorities to provide and maintain safe roads, and to do so using resources efficiently;
g) provide for the establishment and classification of public roads;
h) provide for data bases of public roads, and public access to them;
i) set out rights and duties of road users;
j) control activities on roads;
k) make special provision for restriction on access to roads;
l) identify characteristics of new road types;
m) provide a legal framework for private sector participation in road construction, operation and maintenance, including tolling of roads;
n) establish defenses for civil liabilities; and
o) create offences and provide for penalties.

Section 5 has defined public roads as-

1) The Government may declare a public road.
2) The declaration may be made in relation to land, whether or not it is currently used for passage by members of the public.
3) In the declaration, the Government shall classify the public road as:

(a) a national road; (b) a regional road; (c) a Zila road; (d) an urban road; (e) an Upazila road; (f) a union road; (g) a village road.

Motor Vehicles Ordinance, 1983 (Ordinance No. LV of 1983) was enacted in 22nd September, 1983. The Ordinance will be needed mostly for the registration of motor vehicles and issuing of driving license.

Stage Carriages Act, 1861 (Act No. XVI of 1861) was enacted in 7th July 1861. Section 1 of the Act has defined the term Stage Carriage and said, "every carriage drawn by one or more horses which shall ordinarily be used for the purpose of conveying passengers for hire to or from any place in Bangladesh shall, without regard to the form or construction of such carriage, be deemed to be a Stage Carriages within the meaning of this Act." Again, according to the section 2, no carriage shall be used as a Stage Carriage unless licensed by a Magistrate.

The Paurashava may, in communication with the RHD and LGED and with the prime approval from the Government may enforce the regulations as mentioned above. Again, some of the relevant regulations of developed countries may be enforced by the appropriate authority for the betterment of accessibility, road safety and road management. In connection with this concept, **Highways Act of England and Wales** may be followed.

According to the section 70(1*a*) of the **Highways Act of England and Wales**, the owner or occupier of any structure and the owner or occupier of any land on which a structure is situated shall take all reasonable steps to ensure that the structure or the use of the structure is not a hazard or potential hazard to persons using a public road and that it does not obstruct or interfere with the safe use of a public road or the maintenance of a public road.

(b) Where a structure or the use of a structure is a hazard or potential hazard to persons using a public road or where it obstructs or interferes with the safe use of a public road or with the maintenance of a public road, a road authority may serve a notice in writing on the owner or occupier of the structure or on the owner or occupier of any land on which the structure is situated to remove, modify or carry out specified works in relation to the structure within the period stated in the notice.

(2 a) The owner or occupier of land shall take all reasonable steps to ensure that a tree, shrub, hedge or other vegetation on the land is not a hazard or potential hazard to persons using a public road and that it does not obstruct or interfere with the safe use of a public road or the maintenance of a public road.

(b) Where a tree, shrub, hedge or other vegetation is a hazard or potential hazard to persons using a public road or where it obstructs or interferes with the safe use of a public road or with the maintenance of a public road, a road authority may serve a notice in writing on the owner or occupier of the land on which such tree, shrub, hedge or other vegetation is situated requiring the preservation, felling, cutting, lopping, trimming or removal of such tree, shrub, hedge or other vegetation within the period stated in the notice.

Again, section 71(1*a*) said that, any person who, without lawful authority or the consent of a road authority-

(i) erects, places or retains a sign on a public road, or

(ii) erects, places or retains on a public road any caravan, vehicle or other structure or thing (whether on wheels or not) used for the purposes of advertising, the sale of goods, the provision of services or other similar purpose, shall be guilty of an offence.

Section 76(1) of the **Highways Act of England and Wales** have provisioned regulations for a road authority and said, a road authority may-

(a) construct and maintain drains in, on, under, through or to any land for the purpose of draining water from, or preventing water flowing onto, a public road,

(b) use any land for the temporary storage or the preparation of any gravel, stone, sand, earth or other material required for the construction or maintenance of a public road.

11.15.2 Implementation, Monitoring, Evaluation and Coordination of the Plan

Implementation through Multi-Sectoral Investment Programme: Major infrastructure development works such as primary roads, secondary roads, transportation facilities etc., will largely be controlled by Government. Public works requires efficient co-ordination through the Multi-Sectoral Investment Programme (MSIP).

Objective of a Multi-Sectoral Investment Programme (MSIP) will match a list of the development projects with the funding stream necessary to implement them. There are two basic activities that would determine the contents of MSIP. One activity would be to prioritize and schedule the investment projects of all public agencies so they will collectively help to achieve the development goals and objectives of the Transportation and Traffic Management Plan. Second activity would be to analyze the source and availability of fund for the prioritized list of development projects.

Implementation through Action Plans and Projects: Action Plans and Projects will be the implementation plans to solve problems at the local level. Action plans will take a direct approach toward plan implementation with a minimum of research, reports or elaborate planning methods. These projects will be easily identifiable and will require minimum resource.

Implementation through Development Control: Landuse zoning is one of several methods of plan implementation to be considered. In all cases where some form of development, landuse control may be applied; careful consideration requires the following ideologies:

- the purpose to be achieved by the development controls;
- where controls should be applied;
- what aspect of development needs to be controlled;
- what type of development controls are required;

- what degree or level of development control is required;
- who will be affected by the required control;
- who will be affected by the controls and in what manner;
- when the controls should be applied;
- what will be the likely impact of the controls;
- how and by whom will the controls be administered and enforced.

Development control as an instrument of plan implementation may be selectively applied within the Urban Area Plans. Development controls would also be varied in intensity and detail to suit the particular circumstances. It is important that they should be clear and easily understood by all parties concerned. Since the entire Paurashava Master Plan 'package' has become statutory, development controls associated with its component plans would also be statutory.

Implementation by Facilitating Private Investment: Another approach that would be taken by government toward plan implementation will be to guide and facilitate investments made by the private sector. Government can achieve this with relative ease and at very low cost by setting up a legal and operational framework, coupled with suitable incentives, to facilitate land consolidation, plot boundary readjustment, efficient lay out of plots and provision of local infrastructure by the private sector. The benefits of this approach would be:

- increased efficiently of the urban land market would make, more private land available to urban households;
- would pass much of the development costs for local infrastructure to the private sector and land market mechanisms;
- would increase in land for development without large cash outlays by government to purchase land for development schemes; and
- would keep provision of land for community facilities virtually no cost to government.

Plan Monitoring

The Transportation and Traffic Management Plan would simply be tools for guiding and encouraging the growth and development of an urban area in a preferred manner. In a rapidly changing urban environment, the Transportation and Traffic Management Plan would require to keep up to date. If this is not done, within a few years it will be obsolete. Therefore, it is imperative that the requirement for regular updating of the Transportation and Traffic Management Plan be made a legal requirement.

For implementation of the various programme components of the Transportation and Traffic Management Plan appropriate administrative measures will have to be undertaken. This will essentially include project preparation and monitoring of their

execution and evaluation. For carrying out all these activities appropriate institutional measures are also be needed.

Evaluation

Monitoring and evaluation of on going and implemented projects is essential to keep the future course of action on the right track. An on going project should be regularly monitored and handicaps identified to enable taking appropriate measures at the right time.

Post implementation evaluation is also needed to take appropriate measures correcting past errors-from project preparation to implementation.

The top level supervision has to be done by a high level supervisory committee headed by the Paurashava Mayor, LGED representative, RHD and Local Government Ministry. Other members of the committee will be local Ward Councilors, local community leader/social workers and the Town Planner of the Paurashava. The committee will supervise implementation works regularly and issue necessary instructions to expedite the works of implementation.

Co-ordination

A Planning Section of Paurashava should have close interaction with the citizen of Paurashava at large in order to make people aware of the benefits of a good plan and, therefore, their social responsibility to promote plan implementation in one hand and also resist contraventions on the other. A specific interactive cell is recommended to operate in this regard with following responsibilities:

- Provide pre-application advice to residents, consultants and developers about landuse management issues and application procedures for the submission of development applications.
- Enforce planning and landuse management related legislation and zoning scheme regulations.
- Issue of property zoning certificates.
- Investigate and resolve landuse management complaints, illegal landuse and prosecuting contraventions.

Such interactive windows may be opened in various convenient locations to ensure ease of the answers to commonly asked questions may be shown in the internet. Besides, those may be shown in the print and electronic media time to time.

In spontaneous areas, while all out people's co-operation is needed for project implementation; there will also be some elements of negotiation. Negotiation will be particularly needed in case of road widening projects. It will be a crucial task for Paurashava to convince the affected people to give up their land for road use. Efforts should be made to convince the land owners on the ground of enhancement of property value due to road widening. In case people refuse to offer land free of cost necessary arrangements may have to be made for payment of compensation. This process of

negotiation will be very critical, cumbersome and time consuming, and therefore, has to be handled with utmost care and patience. The best results can be accrued only by wining people's confidence. In case the authority fails to get peoples co-operation they should exercise power of compulsory acquisition of land through Acquisition of Requisition of Immovable Property Ordinance, 1982. Attempts may be made to engage NGOs / CBOs / RHD / LGED to work as catalysts in negotiation.

CHAPTER-12

DRAINAGE AND ENVIRONMENTAL MANAGEMENT PLAN

12.1 Introduction

The consultant has made an extensive drainage network study in Kaliakair Paurashava to improve the living standard of urban dwellers. Major activities of drainage study include:

- Survey for the alignment of drains / drainage channels by using DGPS, Data Logger and Path Finder software;
- Survey for the cross sections of drains by using optical level;
- Survey for the bottom level and area of local depressions;
- Identification of outfalls and drainage structures with their conditions;
- Development of Maps showing drains (with drainage direction).

The study has conducted with the concern of Paurashava Mayor, Councilors and other Paurashava representatives as well as PMO, LGED as per ToR in concentrating on following major issues:

- Information regarding type ofnatural and man-made drains.
- Alignment and crest level of embankments, dykes and other drainage divides.
- Identification of missing links.
- Direction, depth of flow, maximum and minimum tidal level of river, flooding condition, condition of river side settlements during high tide and flood.
- Location, number and condition of pump station, sluice gates, drainage structures.
- Location and area of outfalls, ponds, tanks, ditches; condition in dry and wet season.

12.1.1 Goals and Objectives

The objective of Drainage Plan is to find out the present functions of main and secondary drains and natural streams within the Kaliakair Paurashava. Secondly, to find out level of encroachment over drainage reservations responsible for flooding, water logging of neighborhoods during heavy rains. Thirdly, to find out, the existing roadside drainage pattern including capacities and collected gradients. Since planned development of Paurashava is very much desirable, Drainage Master Plan is necessary to ensure operation and maintenance of the present facilities including new proposal for future. For this, both short and long term project improvement plan involving area based drainage master plan is necessary to ensure proper drainage of the Paurashava.

12.1.2 Methodology and Approach to Planning

In implementing various infrastructural developments, drainage is generally given less priority and is normally considered to be the last or final steps for development. Such scenario is particularly true for Bangladesh; although different types of drainage infrastructures are among others by far the heaviest impact on physical infrastructure network. As a result, physical environment, health, hygiene and standard of living suffer seriously. In development projects, Government, Semi-government and Public sector allocated funds are mostly spend on buildings, roads and other more visible infrastructures and drainage comes as the last item of development. By the time, drainage development begins to start, there appears shortage of fund, consequently as a matter of policy-do little or do-nothing situation appears and as eyewash very little is done for drainage development. In case of urban development, if drainage is not given priority, sufferings of the inhabitants will continuously increase with the passage of time.

Drainage development for urbanization should start with drains. Drains can be classified as Plot drains, Block drains, Tertiary drains, Secondary drains and Primary drains. Other natural drainage infrastructure is lowland, outfall areas, khals and rivers. Man-made drains are Plot, Block, Tertiary, Secondary and Primary drains and others are natural drainage infrastructures. In planning for drainage network, care has given on road network in terms of conflict of drainage and waterways with roads. Drainage and environmental survey was followed the proto-type questionnaire supplied and suggested by the LGED.

Method Used

Storm and used water: The drains are designed to collect excess rainfall that comes as surface runoff from urban area, convey the runoff and finally discharge them to outfalls. The design of drains involves hydrological computations of rainfall intensity, its frequency of occurrence, duration etc., and the total run off of a particular area. The modified rational method shall be used for calculation of peak runoff for a definite frequency and duration from particular drainage basin. One limitation of this method is that it cannot be used for catchment area greater than 320 acres. The Natural Resources Conservation Service (NRCS) method formerly the US Soil Conservation Service (SCS) method shall be used.

In Modified Rational Method, the overall watershed is divided into zones that contribute to hydraulically significant points of concentration. The boundary of the zones is established based upon local topographic boundaries such as streets, existing drainage systems, etc., using good engineering practice. The design flow rate by Modified Rational Formula is –

$$\mathbf{Q = C_s C_r IA}$$

Where:

Q	=	Design runoff flow rate (cfs)
I	=	Rainfall intensity (in/hr)
C_s	=	Storage coefficient
C_r	=	Runoff coefficient

A = Drainage area (acres)

Rainfall Intensity (I): The rainfall intensity is the average rainfall rate for a particular drainage basin or sub-basin. The intensity is selected on the basis of the design rainfall duration and return period. The return period is established by design standards as a design parameter. Rainfall intensity with 5 years return period is generally employed for design of primary drains and canal improvement. Rainfall intensity with 3 years return period is employed for design of secondary drains. The design duration is equal to the time of concentration for the drainage area under consideration. Time of concentration is a critical parameter both for the Modified Rational Equation and SCS method. Time of concentration is generally defined as the longest runoff travel time for contributing flow to reach the outlet or design point, or other point of interest. It is frequently calculated along the longest flow path physically.

Estimating the time of concentration involves identification of an appropriate flow path or paths and estimating runoff travel times along the flow paths. Where post-development conditions include significant pervious surfaces, the time of concentration for just impervious portions of the basin may be required to calculate and compare peak flow response for the basin as a whole against that of the more rapidly-draining impervious surfaces alone. The Time of Concentration composed of the Initial Time of Concentration, sometimes referred to as the Inlet Time or Time of Entry and the Travel Time. Initial Time of Concentration is that time required for runoff to travel from the most remote point in the drainage area to the first point of concentration. This can be determined using the Kirpitch equation. The Initial Time of Concentration must be five minutes or longer. In instances where Initial Times of Concentration are estimated to be shorter than five minutes, five minutes shall be applied.

The second part of the Time of Concentration is the Travel Time that takes the flow to travel along the drain. Channel flow occurs in channels carrying integrated flows, pipes (flowing partially full), and streams. Where storage is not significant, Travel Times can be estimated by applying Manning's Equation, and using estimates of channel characteristics and appropriate roughness values for pipe, channel, or stream features as tabulated in Table-12.1

$$V=[1.49/n]\,[R^{2/3}]\,[S^{1/2}]$$

Where

V = Velocity of flow, feet/second
N = Manning's roughness coefficient for channel flow
S = Slope, feet/foot
R = Hydraulic radius, feet

And

$$T_t = V / (60L)$$

Where

T_t = Travel time, minutes
V = Velocity, feet/second
L = Length, feet

Manning's roughness coefficient for channel flow is listed in Table-3.1.

Table 12.1: Manning's "N" Values for Channel Flow

Conduit Material	Manning's "n"	Conduit Material	Manning's "n"
Closed conduits		Pipes	0.011-0.015
Asbestos-cement pipe	0.011-0.015	Liner plates	0.013-0.017
Brick	0.013-0.017	**Open Channels**	
Cement-lined & seal coated	0.011-0.015	**Lined channels**	
Concrete pipe	0.011-0.015	a. Asphalt	0.013-0.017
Helically corrugated metal pipe (12'' – 48'')	0.013-0.023	b. Brick	0.012-0.018
Plain annular	0.022-0.027	c. Concrete	0.011-0.020
Plan helical	0.011-0.023	d. Rubble or riprap	0.020-0.035
Paved invert	0.018-0.022	e. Vegetation	0.030-0.400
Spun asphalt lined	0.011-0.015	Earth, straight and uniform	0.020-0.030
Spiral metal pipe (smooth)	0.012-0.015	Earth, winding, fairly uniform	0.025-0.040
3 – 8 in. diameter	0.014-0.016	Rock	0.030-0.045
10 – 12 in. diameter	0.016-0.018	Un maintained	0.050-0.140
Larger than 12 in. diameter	0.019-0.021	Fairly regular section	0.030-0.070
Plastic pipe (smooth interior)	0.01.-0.015	Irregular section with pools	0.040-0.100

Source: Municipality of Anchorage. Drainage Design Guideline, March 2007 ver.4.08 pp-62.

Storage Coefficient (Cs): Due to very flat topography of Bangladesh, the runoff is significantly slow. The rainfall after evaporation and infiltration accumulates first in the depressions, until these have been reached their capacity and then runoff. To take these effects a storage coefficient is used. The value of the storage coefficient is based on average ground slope and the nature of the ground surface. Some of the storage coefficients are listed in Table-12.2.

Table 12.2: Storage Coefficients for flat land

Characteristics of surface	Storage Coefficient		
	Slope < 1: 1000	Slope < 1: 500	Slope < 1: 500
Residential urban	0.70	0.80	0.90
Commercial	0.80	0.90	1.00
Industrial	0.70	0.80	0.90
Residential Rural nature	0.60	0.70	0.80
Agricultural	0.50	0.60	0.70
Forest/woodland	0.30	0.40	0.50
Aquatic land	0.30	0.40	0.50
Paved area/road	0.80	0.90	1.00

Source: Countywide Comprehensive Plan (Master Drainage Plan) Exhibit-VIII.

Runoff Coefficient (Cr): The runoff coefficient (C_r) values shall be assigned to the various land use zoning classifications. The runoff coefficient values are based on the slope of the land surface, degree of imperviousness and the infiltration capacity of the land surface. The type of land use can greatly affect the amount of runoff. The quantity of runoff and peak flow rates are increased when the land is developed because the impervious surface area increases with the addition of roads, driveways, roofs, etc. The values of the runoff coefficient (C_r) for each land use classification are listed in Table-12.3.

Table 12.3: Modified Rational Method Runoff Coefficients

Land use designation	Runoff Coefficient C_r
Residential rural	0.30
Residential semi urban	0.40
Residential urban	0.50~0.60
Apartment professional	0.70
Neighborhood Commercial	0.85
Community Commercial	0.85
Industrial	0.70~0.75
Slum area	0.50~0.55
Agricultural exclusive	0.25
Forest and watershed	0.20~0.25
Public facilities	0.3~0.60
Forest/ woodland	0.25
Paved area/road	0.99

Source: Countywide Comprehensive Plan (Master Drainage Plan) Exhibit-VIII.

Catchment Area: The size and shape of the catchment or sub-catchment for each drain shall be determined by plan metering topographic maps and by field survey. In determining the total runoff of a catchment area the following assumptions to be made:

a. The peak rate of runoff at any point is a direct function of the average rainfall for the time of concentration to that point.
b. The recurrence interval of the peak discharge is same as the recurrence interval of the average rainfall intensity.
c. The Time of Concentration is the time required for the runoff to become established and flow from the most distant point of the drainage area to the point of discharge.

Projection

In implementing various infrastructures for development, drainage is generally given less priority and is normally considered to be the last or final steps for development. Such scenario is particularly true for Bangladesh; although different types of drainage infrastructures are among others by far the heaviest impact on physical infrastructure network. As a result, physical environment, health, hygiene and standard of living suffer seriously. In development projects, Government, Semi-government and Public sector allocated funds are mostly spent on buildings, roads and other more visible infrastructures and drainage comes as the last item of development. By the time, drainage development begins to start, there appears shortage of fund, consequently as a matter of policy-do little or do-nothing situation appears and as eyewash very little is done for drainage development. In case of urban development, if drainage is not given priority, sufferings of the inhabitants will continuously increase with the passage of time.

Drainage development for urbanization should start with drains. Drains can be classified as Plot drains, Block drains, Tertiary drains, Secondary drains and Primary drains. Other natural drainage infrastructure is lowland, outfall areas, khals and rivers. Man-made drains are Plot, Block, Tertiary, Secondary and Primary drains and others are natural drainage infrastructures. In planning for drainage network, care will be given on road network in terms of conflict of drainage and waterways with roads. In the following and

subsequent sections major element, their principle, purpose and function of drainage infrastructures are discussed and presented in lower to higher order which will be considered as a method for drainage plan.

Plot Drains: Plot drains are provided around a building on a plot. In most cases, the drain is made of bricks and is rectangular in shape that can carry storm water generated in the plot and from the building. Plot drain is connected to the Block or Mohallah drain. The sketch below gives an impression of plot drain usually constructed in a plot and block drains that follow plot drain.

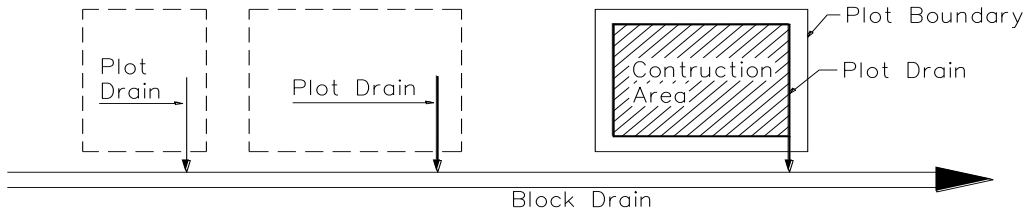

A Sketch Showing Plot Drain and Block Drain

Block Drain: Block drain is provided at the outside of a block that accommodates several buildings of the block. The block drains are made of bricks like plot drains but bigger in size so that it can serve the storm water generated within the block and the buildings and open areas within the block. Sometimes the block drain may serve few neighboring blocks or Mohallahs. Block drains carry storm water coming from the plot drains. Shape of the block drain is also rectangular, bigger than plot drains and its bottom is lower than plot drain. Sketch of the plot drain also shows the block or Mohallah drain under plot drain.

Primary Drain: Primary drains are also called main drains. Primary drains cover larger storm drainage area than tertiary and secondary drains. Sometimes primary drain bears local name. In ascending order its position is third. Its cross-section is larger than other types; carrying capacity is high and is constructed of brick, cement concrete and sometimes reinforced concrete. Primary drains may be of earthen structure provided sufficient land is available and land value is low. Contributing drainage water comes from tertiary and secondary drains. Primary drains discharge its drainage water to outfall, natural khal, river or large lowland area / Beels. Sketch below shows the typical cross-section of the primary drain.

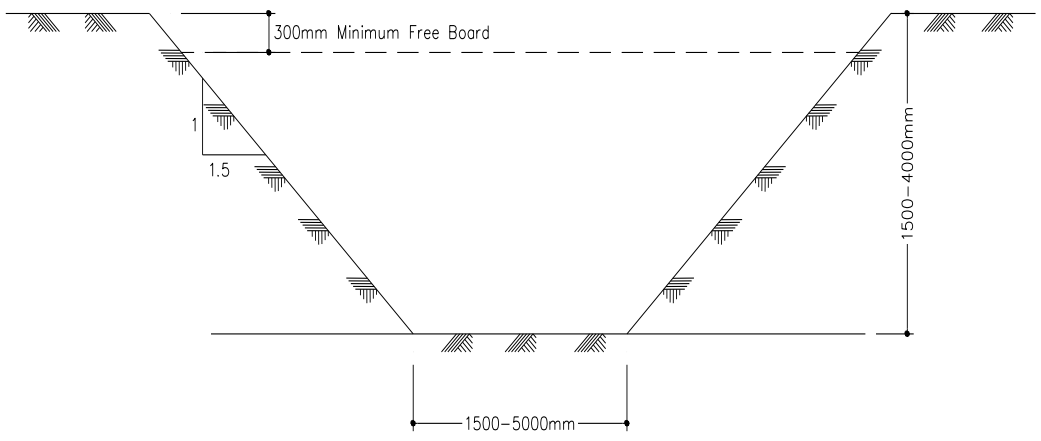

Typical Earthen Primary Drain

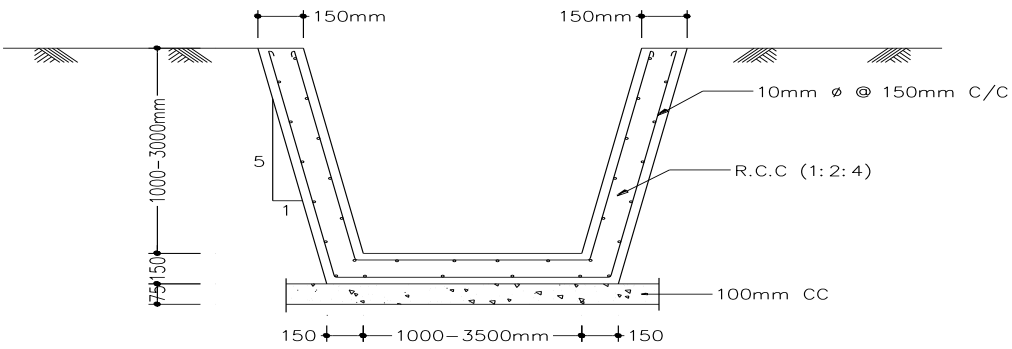

Typical R.C.C Primary Drain

A schematic diagram showing the origin of Tertiary, Secondary and Primary drains and their destinations to the outfall river, presented above, are also presented here.

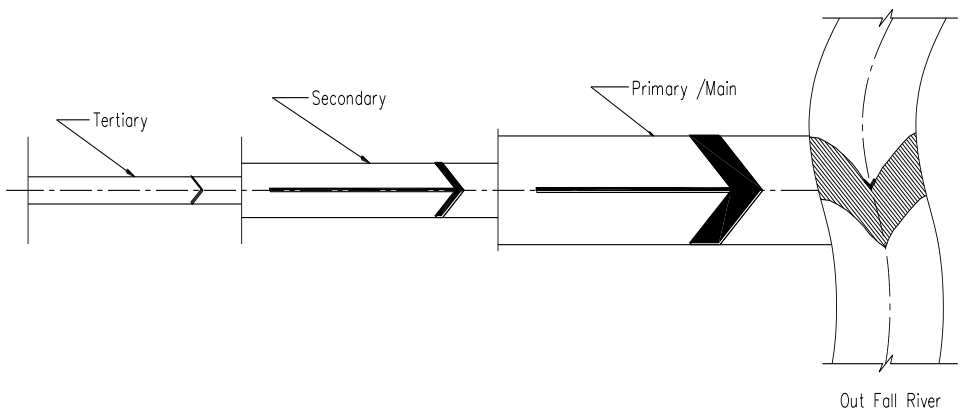

Schematic diagram of Tertiary, Secondary and Primary drains

Secondary Drain: Secondary drains collect discharge from tertiary drains. One secondary drain may receive drainage discharges from several tertiary drains in its course. Size and capacity of secondary drain is much bigger than tertiary drains; its catchment area is much bigger than tertiary drain. Like tertiary drain, it may run parallel to bigger roads. Secondary drains may run along and through the middle of its storm water contributing area. The typical cross-section, size and shape, and its construction material are shown below.

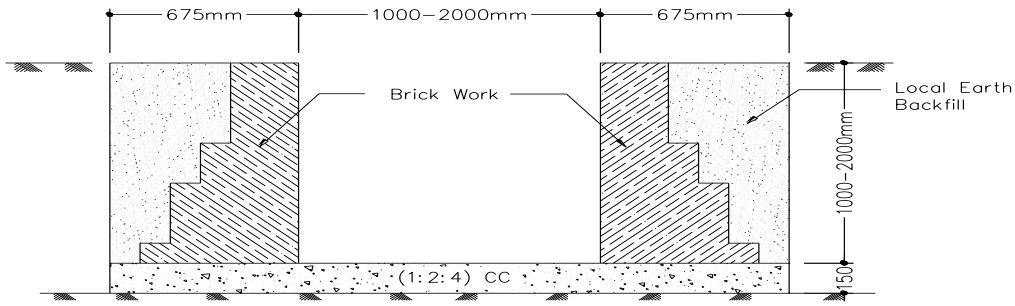

Typical Secondary Drain (Dimensions in mm)

Tertiary Drain: Tertiary drain carry run-off or storm water received from the above mentioned plot drains and block or Mohallah drains. Their catchment area or storm water contributing area is bigger than Mohallah drains. In most Paurashava areas it is difficult to find such naming or classifications. However, such classifications can be seen in references. Tertiary drains generally are the under jurisdiction of Paurashava. Those drains or drainage networks are constructed and maintained directly by the Paurashava. These drains are constructed by bricks, cement concrete and sometimes by excavating earth in their alignments. These drains may run parallel to road or across the catchments area. Sometimes borrow pits of the road serves as drains provided borrow pits are uniformly and continuously excavated. Borrow pits that serve as drains may be lined or channeled by brick works. Tertiary drains deliver its discharge usually to secondary drains. A typical tertiary drain is shown below.

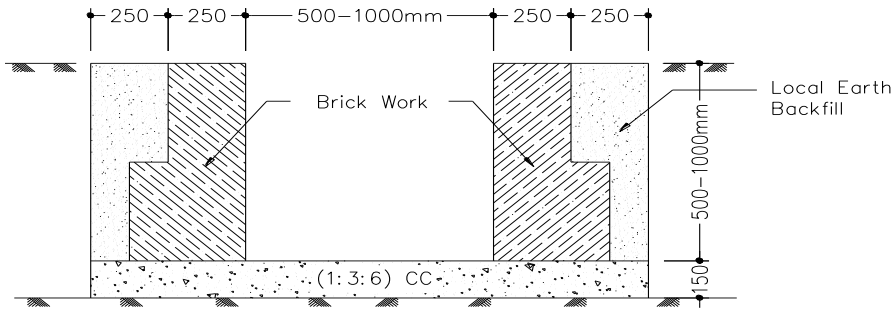

Typical Tertiary Drain (Dimensions in mm)

Drainage sluices, pipe sluices and siphons: Drainage sluices, pipe sluices and siphons are provided on the embankments. Embankments protect the area from floods coming from outside rivers and make the study area free from flood.

However, storm water from rainfall-runoff within the area causes localized flood, drainage congestion and submergence. Sketch below shows a few of such structures. A schematic view of drainage sluice, pipe sluice and siphon on embankment, which relieve drainage congestion presents below.

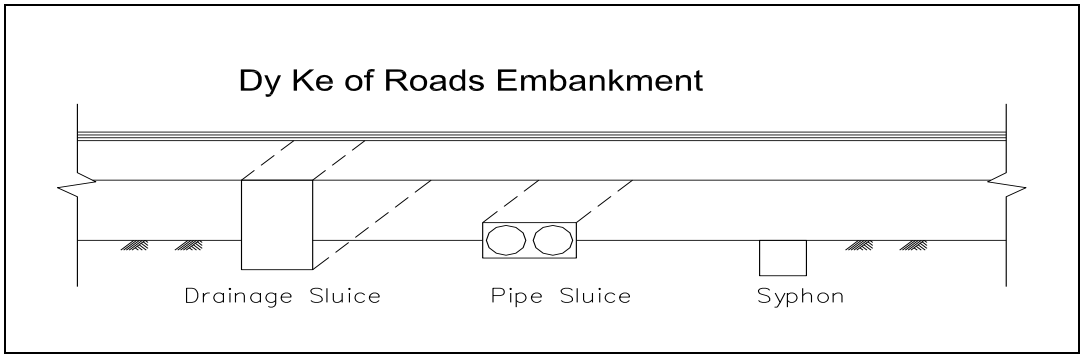

Rainfall is the source of storm drainage water irrespective of urban or rural catchments. Average annual rainfall in Kaliakair is about 2000mm. After infiltration, deep percolation and evaporation is about 50% of this rainfall water takes the form of drainage water for semi-urban and urban areas.

Sluice gates, Regulators and Navigation locks: These types of structures are provided on the flood control embankments. Sluice gates are functioning to vent out water from the countryside to the river. Flap gates are generally installed in the riverside so that river water cannot enter into the main land. On the other hand whenever the river water level becomes low and countryside water level is high, countryside water drains out through sluice.

Regulators also serve the similar purpose as sluice gates; however the size of regulators is much bigger than sluice gates. Regulators may have control gates in the countryside and in the riverside. Drainage of water to the river or flashing of water into countryside are possible by operating simultaneously countryside and riverside mechanical gates. Navigation lock sometimes is provided on the flood embankment to allow boat and ferry passages from the river and from the countryside. It is a simple structure with bigger chamber and large lift gates both at riverside and countryside. By operating these gates, boats and river crafts can be transferred from the river to countryside and vice versa.

Reservoirs: Large tanks, ponds, Dighis, lakes, etc. serve as immediate detention areas for storm water. Those structures are man-made and also natural; may be privately owned or government-owned or khas land. These structures function as drainage relief and source of water for emergency use, fisheries, duckeries, environment and nature preservation. For every mouza such reservoir is available. Physical feature survey maps and field survey maps (tank, pond and reservoir) show the existence of reservoirs and

database shows their dimensions. Those structures should not be disturbed or removed by physical interventions by fillings or other means rather should be properly maintained and preserved.

Drainage Khals and Waterways: Khals and waterways are natural channels and act as drainage elements. In every mouza more or less such natural channel, khals and waterways carry the excess storm water to the connecting river lying further in the down stream. Sometimes old and silted-up khals are re-excavated to improve drainage efficiency. Most of the natural khals carry the local storm water particularly runoff from the Mouza / Mouzas those it passes through. Khals are narrow and deep in cross-sections; on the other hand waterways are shallow and wider. Physical feature survey maps, field survey maps (river, khal / drainage) show the drainage khals and waterways and their database shows the dimensions. The sketches below show the sectional view of khals and waterways.

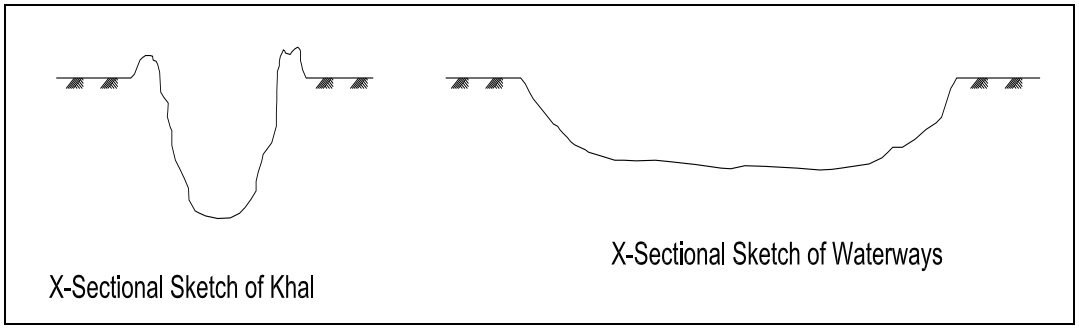

12.2 Existing Drainage Network

12.2.1 Introduction

Existing drains in the Paurashava have not formed any network; only household centered construction to drain out waste water. Existing River,Canal, pond and ditches are trying to manage the drainage requirements. Lack of drainage network is causing water logging in the Paurashava area when it rains. All drainage networks require to be developed with primary, secondary and tertiary drains to mitigate the current water logging problem.

Further development of drain should follow the bulk density and construction is being proposed in the Drainage Plan. Length, width and depth of the drain have considered according to the density of population, road width and out falls. Slope of the drain should be maintained according to the slope of the area and the level of river water according to the seasons.

12.2.2 Existing Drainage System / Network

Natural Drainage System: There are 50 ponds, 256 ditches, seven canals and one river covering 552.16 acres area of Kaliakair Paurashava. Existing canals are trying to serve the drainage requirements of the Paurashava. Among the drains, only at five Wards drains have been found to be connected to these canals; whereas ponds/ ditches have been found to be connected with existing drains/ canals. The entire drainage network is

required to be developed with primary, secondary and tertiary drains to mitigate the water logging problem.

Table 12.4: Summary of Water Bodies in Kaliakair Paurashava

Water Bodies	Nos.	Area in Acre
Pond and ditch	306	474.66
Khal/Canal	7	44.91
River	1	32.59
Total	236	552.16

Source: Physical Feature Survey, 2010

There are linkages between natural and man-made drainage system. But how much effective and active the linkage is with the poorly maintained man-made drains is a question. Almost half of the depth of the man-made drain is filled with solid garbage; as a result, the channel is not properly functioning.

Man-made Drains:

The existing man made drainage network condition in the Paurashava has been highlighted in Table-12.5. These man-made drains are both katcha and pucca. Out of these nine Wards, Ward No 2, 3, 4, 5, 6 and 7 has katha drains. The quality of these drains are very poor and without cover. It is mostly open drains. The total length is 11.5 km and 5.43 km of pucca drain and around 6.07 km of katcha drain comprise the man-made drainage network of Paurashava. Existing man-made drains of the Kaliakair Paurashava are shown in the table 12.5.

Table 12.5: Existing man-made drains of the Kaliakair Paurashava

Sl. No.	Types of Drain	Length (km)
1.	Pucca Drain	5.43
2.	Katcha Drain	6.07
Total		11.5

Source: Drainage and Environment Survey, 2009

Survey study demonstrates due to lack of proper planning of drainage central part, especially the bazaar road area, has the inundation problem. Average width and depth of drains are 0.28 meter and .17 meter.

The drainage condition, the serviceability, structural conditions, obstruction, situation, blockage are all found in the man-made drain network. The bad or poor drains usually had damaged side walls, surfaces with obstruction, debris, solid waste, irregular water way etc.

The Paurashava has been only 11.5 km of manmade drainage network and the major portion is poor in condition. These drains have not formed any network; only household level construction is available to drain out waste water can be seen in Paurashava. The existing Turag River and 6 small and narrow canals at present are trying to serve the drainage requirements. These canals pass through the Paurashava area and are linked with the nearby Turag River.

12.2.3 Analysis on Land Level Topographic Contour

The study area of Kaliakair Paurashava has been surveyed with RTK-GPS/ DGPS and Total Station as per specification for spot interval given in the TOR. For this purpose, a total of 2281 spot values were collected for the study area. A contour line/contour joins points of equal elevation (height) above mean sea level. A contour map is a map illustrated with contour lines which shows valleys and hills, and the steepness of slopes. The contour interval of a contour map is the difference in elevation between successive contour lines. The lowest spot height is 5.12 m PWD and the highest spot height is 17.45 m PWD. Around 80% of the spot heights are between 10 m to 14 m and average height of land of the surveyed area is 11.56 m PWD. Details of Land Levels and spot value, maximum, minimum and average height of the study area are shown in the Table-12.6 and Table-12.7 below:

Table 12.6: Spot Value and their Unit (Number of Spot (z) Value and their Statistics)

No.	Spot Unit	Value (meter)
1	Total Spot Number	2281
2	Average Spot Height	11.22
3	Maximum Height	17.45
4	Minimum Height	5.12
5	Variance	4.001
6	Standard Deviation	2.01

Source: Topographic Survey by DDC, 2009

Map 12.1: Existing Drainage Network of Kaliakair Paurashava

Map 12.2: Land Level of Kaliakair Paurashava

Table 12.7: Spot Interval and Frequency

No.	Spot Interval	Spot Number (Frequency)	Percentage (%)
1	< 5.12	120	5.26
2	5.12 – 9	53	2.32
3	9– 11	700	30.69
4	11– 15	1397	61.25
5	15 >	11	0.48
Total		194	100.00

Source: Topographic Survey by DDC, 2009

From the spot level values having the x, y and z values being determined for the surveyed area, a contour map of the surveyed area has been prepared. The dense contour areas were generally high lands, which are shown in Map 12.7. Medium dense contour areas were medium high land and low land area generally less dense contour value lands.

A contour map for Kaliakair Paurashava at 0.30m vertical interval was drawn using the spot levels surveyed roughly at 50m interval. It was observed that except Ward Nos. 2 and 5 all Wards have found the highest elevation. The contour lines were generated without road spots to find out the exact view of elevation. Lowest elevation was found on natural features (Canal, Pond and Khal) in different Wards of the Paurashava. A detail Contour Map of Kaliakair Paurashava area is presented in he map. The detail of the summary of contour in Kaliakair Paurashava is presented in the Table 12.8.

Table 12.8: Contour Derived from Spot Elevation (Excluding Road Spots)

No.	Spot Unit	Value
1	Total Contour Number	2281
2	Average Contour Value	11.22
3	Maximum Contour Height	17.45
4	Minimum Contour Height	5.12
5	Range	5.12-17.45
6	Variance	4.001
7	Standard Deviation	2.01

Source: Topographic Survey by DDC, 2009

The highest contour level is found in Ward No. 2 (17.45 mPWD) and the lowest height is found in almost all Wards. Topography of different wards of Kaliakair Paurashava is almost neared to mean elevation).

12.2.4 Analysis of Peak Hour Run off Discharge and Identification of Drainage Outfalls

Kaliakair Paurashava lies in the tropical monsoon climatic region and more specially, represents the climate of Tangail district. The rainy season occurs mainly from June to October. The dry season extends from November to March and is cool and almost rainless, receiving less than an average of 120 mm for the total 5 months period. April to May is the pre-monsoon season, with high temperatures and periodic thunderstorms. The maximum temperature recorded in April is 33.9 degree Celsius and the minimum temperature is 11.4 degree Celsius in January.

No peak hour run off storm water discharge is found. During rainy season, rain water is being drained through the natural drains. All pucca drains are linked with the Canals, rivers, ponds and natural water bodies as an outfall. As a result, waters of the river, canals and other water bodies are polluting through those discharging elements.

12.3 Plan for Drainage Management and Flood Control

12.3.1 Plan for Drain Network Development

Drainage network in the Paurashava is mostly under govt. initiative. There is no well organized, well constructed drainage pattern / network encompassing all the Wards of the Paurashava. Whatever drainage network that exists is mostly constructed by the Paurashava authority. Drainage aspects plays a vital role in clearing waste water but the survey finds most of the drainage network unable to function due to poor maintenance, design, debris accumulations and faulty gradients. Drainage must receive image priority in Ward Action Plan as water logging within selected places of Paurashava is sevear, therefore, planning options for drainage of the future Paurashava area including Water Development and Flood Control Projects, should be seriously pursued. The present inefficient drainage needs to be well designed encompassing all the Wards right from household level to main road. There is no drain for household storm waste. Existing open drains are being obstructed with rubbish and reduce the discharge facilities, creating health hazards.

12.3.1.1 Drain Network Plan

There is no natural canal in the Paurashava, So, there is a need to develop a planned drainage network.The activity for the relevant authority will be assisted by the preparation of the drainage master plan for the Paurashava which details the necessary corridors, sizes and generalized locations for:

- Primary Drain
- Secondary and tertiary drain
- Storage ponds
- Silt traps
- River embankment

Initially, the Paurashava will encourage implementation of the first phase recommendation of the drainage master plan. A brief summary of the proposals to be undertaken in Phase-1 is given below. Reference should be made to the Map for identification of the drainage areas referred in the text.

Phase-1 (Storm water drainage)

- Improvements and the removal of obstacles from existing drainage areas and link up of the missing link of existing drainage. Conservation of all ditches and ponds above 0.3 acres for retaining the storm water under **“Play field, Open space, Park and**

Naural Water Reserviour Conservation Act, 2000". Mouza schedule for waterbody conservation has annexed in **Annexure-G.**

- Construction of new secondary and tertiary canals in drainage where necessary. The provision of flood control regulators in drainage areas marked as in the map.

Phase-2 (Rain water and household drainage)

- Construction of surface drain linked with the residences, may be covered or uncovered.
- Provide linkages with secondary and tertiary drains.
- Out-fall of such drains may be nearby low-lands and river.
- For discharging of rainwater from commercial areas, covered surface drain may be constructed and they will be linked with the secondary and tertiary canals.

12.3.1.2 Proposal for Improvement of the Existing Drain Networks

A wider scope for construction of a drainage system may be provisioned in the Paurashava. At least central areas are open for such development immediately and other areas may be followed for projected period as designed in the plan. Except the core area the Paurashava has wide scope for imposing drainage system. The principles required for drainage plan are available in the area. Land slope, nearness of the natural drainage, sparse population density and soil condition are in favour of drainage construction.

Map 12.3: Proposed Drainage and Flood Control Components

Drainage corridors: If a drainage network has to be installed, the drainage originating throughout the Paurashava would be carried by means of surface drains and culverts. These should be accommodated within road reserves.

General location required: For sewerage treatment plant, large plot will be needed, preferably on outskirts of the Paurashava. For sewerage pumping station, small plots throughout the Paurashava will be needed and a system should be introduced.

Maintaining of land slope: Important component of the drainage network is land slope, which was not maintained during the construction of existing drains. The slope of the Paurashava is found towards north-west to south-east. Slope of all drains should maintain this direction.

12.3.1.3 List of Proposed New Drains

For the removal of existing drainage congestion and provisioning of effective drainage system, a planned drainage network has been proposed which are shown in the map 12.3 shows. A number of new primary and secondary drains have been prescribed. In the Paurashava, existing length of the drain is 11.5 km. and about 118.83 km drain is being proposed of which 17.90 Km are primary drain, 60.31 Km are secondary drain and 41.62 Km are tertiary drain **(ANNEX-E).** To develop a network, all Wards have been considered and in some places emphasize has given providing on missing links rather than new.These network should be develop with the development of the road network.

Table 12.9: List of proposed new drains

Sl.No	Type	Length (km)	Width
1.	Primary	17.9	3m and above
2.	Secondary	60.31	1-3m
3.	Tertiary	40.62	less than or equal 1 m
Total		118.83	

12.3.1.4 List of Infrastructure Measures for Drainage and Flood Control Network

Different types of bridges and culverts have been identified from the physical feature survey. There are altogether 11 Bridge and 149 culverts (Box and Pipe culverts) in the Paurashava. Those culverts are located on the river, major canals and drainage channels.

No remarkable flood occurred during over the years at Kaliakair Paurashava.Water logging is common, dyke is an important issue for this Paurashava, but there is no dyke or embankment in the Paurashava.

Except the above infrastructure, more 3 bridges and 40 culverts will be needed on different proposed roads as presented in the map.

Table 12.10: List of existing and proposed infrastructures for drainage and flood control

Name of infrastructure	Existing (No.)	Proposed (No.)
Bridge	11	0
Culvert/PipeBox	149	15
Sluice Gate	0	0
Flood Wall	0	0
Road cum Embankment	0	0

The utility services and facilities which are related to drainage and environmental management are shown in the table 12.11.

Table 12.11: Proposed new utility services.

Proposed facilities	Ward No.	CS Mouza Name	Plot No.	Area in Acre
Dumping Site-1	2	Janurchala_051_01	90 part, 91, 92 part, 93-94	4.23
Dumping Site-2	9	Safipur_161_01	16 part, 17, 21 part	3.91
Slaughter House-1	1	Shemoiltali_141_02	409	0.49
Slaughter House-2	7	Chandra_154_02	2014 part, 2015 part	0.24
Public Toilet-1	1	Shemoiltali_141_04	32 part	0.07
Public Toilet-2	7	Chandra_154_01	104 part	0.15
Waste Transfer Station-1	1	Shemoiltali_141_04	32 part	0.16
Waste Transfer Station-2	6	Baro Kalampur_148_02	345 part, 363 part	0.73
Waste Transfer Station-3	7	Chandra_154_01	94 part, 104 part	0.28
Water Station	3	Goalbathan_144_02	610 part, 619 part	0.29
Total				10.89

12.4 Plan Implementation Strategies

12..4.1 Regulations to Implement the Drainage and Flood Plan

The regulations which will be needed for the implement of drainage and flood plan are:

1. Section 3 of the Acquisition and Requisition of Immovable Property Ordinance, 1982 is needed for acquisition of land in view to construct drainage and flood control components. The Water Development Board, according to the demand, will apply to the Deputy Commissioner for such acquisition.
2. Water Development Board Ordinance, 1976 delegate power to the Water Development Board for construction of embankment. To control intrusion of flood water and improvement of drainage facilities, the Board is empowered to take necessary actions according to the regulations prescribed in the Ordinance.
3. Irrigation Act, 1876 has prescribed regulations for the improvement of irrigation facilities through the improvement of drainage facilities in view to increase agriculture production. Deputy Commissioner may enforce any regulations prescribed in the Act necessary for irrigation facilities.
4. Canal and Drainage Act, 1872 has enacted for excavation of canal and removal of drainage congestion from agriculture land. The Deputy Commissioner may authorize any person, through a written approval, for excavation of canal in view to improve irrigation facilities for agriculture practices.
5. Public Health (Emergency Provision) Ordinance, 1944 has enacted for the improvement of drainage and sanitation facilities. Department of Public Health Engineering (DPHE) is authorized to enforce the regulations prescribed in the Ordinance. The government approves project for DPHE mostly for the improvement of drainage and sanitation facilities in urban areas.

12.4.2 Implementation, Monitoring, Evaluation and Coordination of the Plan

Implementation through Multi-Sectoral Investment Programme: Major infrastructure development works such as primary roads, water supply, drainage, etc., will largely be controlled by Government. Public works requires efficient co-ordination through the Multi-Sectoral Investment Programme (MSIP).

Objective of a Multi-Sectoral Investment Programme (MSIP) will match a list of the development projects with the funding stream necessary to implement them. There are two basic activities that would determine the contents of MSIP. One activity would be to prioritize and schedule the investment projects of all public agencies so they will collectively help to achieve the development goals and objectives of the Urban Area Plan. Second activity would be to analyze the source and availability of fund for the prioritized list of development projects.

Implementation through Action Plans and Projects: Action Plans and Projects will be the implementation plans to solve problems at the local level. Action plans will take a direct approach toward plan implementation with a minimum of research, reports or elaborate planning methods. These projects will be easily identifiable and will require minimum resource.

Implementation through Development Control: Landuse zoning is one of several methods of plan implementation to be considered. In all cases where some form of development, landuse control may be applied; careful consideration requires the following ideologies:

- the purpose to be achieved by the development controls;
- where controls should be applied;
- what aspect of development needs to be controlled;
- what type of development controls are required;
- what degree or level of development control is required;
- who will be affected by the required control;
- who will be affected by the controls and in what manner;
- when the controls should be applied;
- what will be the likely impact of the controls;
- how and by whom will the controls be administered and enforced.

Development control as an instrument of plan implementation may be selectively applied within the Urban Area Plans. Development controls would also be varied in intensity and detail to suit the particular circumstances. It is important that they should be clear and easily understood by all parties concerned. Since the entire Paurashava Master Plan ‘package’ has become statutory, development controls associated with its component plans would also be statutory.

Implementation by Facilitating Private Investment: Another approach that would be taken by government toward plan implementation will be to guide and facilitate investments made by the private sector. Government can achieve this with relative ease and at very low cost by setting up a legal and operational framework, coupled with suitable incentives, to facilitate land consolidation, plot boundary readjustment, efficient lay out of plots and provision of local infrastructure by the private sector. The benefits of this approach would be:

- increased efficiently of the urban land market would make, more private land available to urban households;
- would pass much of the development costs for local infrastructure to the private sector and land market mechanisms;
- would increase in land for development without large cash outlays by government to purchase land for development schemes; and
- would keep provision of land for community facilities virtually no cost to government.

Plan Monitoring

The Urban Area Plan would simply be tools for guiding and encouraging the growth and development of an urban area in a preferred manner. In a rapidly changing urban environment, the Urban Area Plan would require to keep up to date. If this is not done, within a few years it will be obsolete. Therefore, it is imperative that the requirement for regular updating of the Urban Area Plan be made a legal requirement.

For implementation of the various programme components of the Urban Area Plan appropriate administrative measures will have to be undertaken. This will essentially include project preparation and monitoring of their execution and evaluation. For carrying out all these activities appropriate institutional measures are also be needed.

Evaluation

Monitoring and evaluation of on going and implemented projects is essential to keep the future course of action on the right track. An on going project should be regularly monitored and handicaps identified to enable taking appropriate measures at the right time.

Post implementation evaluation is also needed to take appropriate measures correcting past errors-from project preparation to implementation.

The top level supervision has to be done by a high level supervisory committee headed by Paurashava Mayor, LGED representative and Local Government Ministry. Other members of the committee will be local Ward Councilors, local community leader/social workers and the Town Planner of the Paurashava. The committee will supervise implementation works regularly and issue necessary instructions to expedite the works of implementation.

Co-ordination

A Planning Section of Paurashava should have close interaction with the citizen of Paurashava at large in order to make people aware of the benefits of a good plan and, therefore, their social responsibility to promote plan implementation in one hand and also resist contraventions on the other. A specific interactive cell is recommended to operate in this regard with following responsibilities:

- Provide pre-application advice to residents, consultants and developers about landuse management issues and application procedures for the submission of development applications.
- Enforce planning and landuse management related legislation and zoning scheme regulations.
- Issue of property zoning certificates.
- Investigate and resolve landuse management complaints, illegal landuse and prosecuting contraventions.

Such interactive windows may be opened in various convenient locations to ensure ease of the answers to commonly asked questions may be shown in the internet. Besides, those may be shown in the print and electronic media time to time.

In spontaneous areas, while all out people's co-operation is needed for project implementation; there will also be some elements of negotiation. Negotiation will be particularly needed in case of road widening projects. It will be a crucial task for Paurashava to convince the affected people to give up their land for road use. Efforts should be made to convince the land owners on the ground of enhancement of property value due to road widening. In case people refuse to offer land free of cost necessary arrangements may have to be made for payment of compensation. This process of negotiation will be very critical, cumbersome and time consuming, and therefore, has to be handled with utmost care and patience. The best results can be accrued only by wining people's confidence. In case the authority fails to get peoples co-operation they should exercise power of compulsory acquisition of land. Attempts may be made to engage NGOs / CBOs to work as catalysts in negotiation.

12.5 Environmental Management Plan

12.5.1 Introduction

The plan has documented Kaliakair Paurashava area's environmental conditions, determines potentiality for present and past site contamination (e.g., hazardous substances, petroleum products and derivatives) and identifies potential vulnerabilities (to include occupational and environmental health risks).

12.5.2 Goals and Objectives

Based on the information and data on the air, water, noise, soil, drainage congestion, river erosion, garbage disposal and industrial and clinical wastes an effective and action

oriented plan is required as prescribed in the ToR. Preparation of environmental management plan is the ultimate goal of this study.

12.5.3 Methodology and Approach to Planning

Environmental survey has conducted following the standard methods and procedures to determine environmental pollutions. Elements of pollutions of environment are air, water, land and noise for the development of urban areas. The Consultants have taken necessary assistance and information from the Paurashava Mayor, Councilors, Engineers and other concerned officials as well as the general inhabitants to determine pollution in air, water, land and noise. Based on the information and data collected from the field and secondary sources, detailed report has been prepared. Data collection format and questionnaire was approved by the PD of UTIDP, LGED. The data collection procedure incorporates discussion meeting with the Paurashava Mayor, Councilors and other Paurashava representatives. Discussions were also made with other GOs like DPHE, BADC, etc. and NGOs representatives working in the Paurashava.

12.6 Existing Environmental Condition

12.6.1 Introduction

The Paurashava is a part of greater Tangail district. Some information has collected from secondary materials and they are on geology, soil and sub-soil condition, climate, temperature, humidity, rainfall, wind direction and hydrology. Other relevant information is being collected from field survey and they are mostly on the environment pollution. Those information presents sequentially in the following paragraphs.

12.6.2 Geo-morphology

Geology, Soil and Sub-soil Conditions: Kaliakair Paurashava is located entirely on the floodplains of the Turag River and comprising mostly recent alluvium. The topography is very gentle undulating, with major ridges and associated lower basins in most cases. The basins are moderately to deeply flooded and often remain wet during monsoons. The Kaliakair Township is on higher ground above the annual flood level. Numbers of smaller channels are connected with the Turag River to drain the rain water of the Paurashava.

On the other hand, Geosynclinals Basin in the southeast is characterized by the huge thickness (maximum of about 20 km near the basin centre) of elastic sedimentary rocks, mostly sandstone and shale of Tertiary age. It occupies the greater Dhaka-Faridpur-Noakhali-Sylhet-Comilla-Chittagong areas. The huge thickness of sediments in the basin is a result of tectonic mobility or instability of the areas causing rapid subsidence and sedimentation in a relatively short span of geologic time. The geosynclinals basin is subdivided into two parts i.e. fold belt in the east and a fore deep to the west.

Soil types, strength and density characteristics based on Standard Penetration Test Values (N) have been mentioned for the different types of deposits at various depths.

Cohesive silt and clay layers having N-values less than 4 are very soft to soft and are not considered suitable to support any civil engineering structures without ground

improvement. There are only a few areas near the waterfronts (of Bangshi Rivers) with such low N-values in the surface underlain by comparatively strong clay and sand soil strata. Sand layers with variable quantities of silt/clay having N-values less than 10 are considered very loose to loose. In a few locations such weak sandy layers occurred. They occurred usually in the surface layers.

The natural clay soils of investigated area can be divided into two major groups distinguished by their colours as under:

Red clay : Light brown to brick red and massive, containing ferruginous and calcareous nodules.

Mottled clay : Earthy grey with patches of orange, brown colour, massive and contains ferruginous and calcareous nodules.

Again, in the filled up areas (along the National Highway, from Dhaka to Barisal via Kaliakair) there are mixtures of many coloured soils carried from different borrowing areas. Consistency of cohesive soil deposits (plastic silts and clays) and relative density of cohesion less soil deposits (non-plastic silts and sands) have been described in accordance with internationally accepted terms, which give approximate indication of strengths of the soil strata encountered at different depths.

Table 12.12: SPT N-Values

Consistency	SPT N-value	Allowable bearing Capacity (kPa)
Very soft	0–2	< 25
Soft	2–4	25–50
Medium	4–8	50–100
Stiff	4–15	100–200
Very stiff	15–30	200–400
Hard	> 30	> 400

For plastic silts and clays consistency terms like very soft, soft, medium stiff, stiff, very stiff and hard indicate the following approximate allowable bearing capacity of the different soil strata estimated on the basis of SPT N-values.

For cohesion less soil deposits (non-plastic silts and sands) relative density has been described with terms like very loose, loose, medium dense, dense and very dense on the basis of SPT N-values measured in the different cohesion less soils strata encountered within the explored depth of 15m. These relative density terms give the following approximate strength characteristics based on SPT N-values.

Table 12.13: Strength Characteristics

Relative Density	**SPT N-Value**	**Estimated Shearing Angles**	**Strength Characteristics**
Very loose	> 4	28°	Very poor
Loose	4–10	30°	Poor to fair
Medium dense	10–30	32°	Fair to good
Dense and Very dense	> 30	34°	Good to excellent

Climate

The Paurashava of Kaliakair has a pronounced tropical monsoon climate. The mean temperature ranges from about 33.9^{0}C in April to about 11.4^{0}C in January. Mean annual temperature is about 25.6^{0}C. Average annual rainfall is about 2148 mm of which occurs in seven months from April to October. Physically the Paurashava is characterized by alluvial formations caused by Turag River. The maximum temperature recorded in April is 33.9 degree Celsius and minimum temperature recorded in January is 11.4 degree Celsius.

Temperature

In 2009, Kaliakair Paurashava had three distinct seasons: winter (November-March), dry with temperature 11.4° to 18.7°C; the pre-monsoon season (April-May), gradually increasing rain and hot with temperature reaching up to 33.9°C; and the monsoon (June-October), very wet with temperature around 32°C.

Humidity

Kaliakair Paurashava lies in the tropical monsoon climatic region and more specially, represents the climate of Dhaka district. Average annual rainfall is about 2148 mm mm of which occurs in seven months from April to October. The dry season extends from November to March and is cool and almost rainless, receiving less than an average of 120 mm for the total 5 months period. March to May is the pre-monsoon season, with high temperatures and periodic thunderstorms and the monsoon (June-October) is very wet season with heavy rains in regular interval.

Rainfall

Kaliakair Paurashava lies in the tropical monsoon climatic region and more specially, represents the climate of Tangail district. The rainy season occurs mainly from June to October. The dry season extends from November to March and is cool and almost rainless, receiving less than an average of 120 mm for the total 5 months period. April to May is the pre-monsoon season, with high temperatures and periodic thunderstorms. The maximum temperature recorded in April is 33.9 degree Celsius and the minimum temperature is 11.4 degree Celsius in January.

In 2009, the Paurashava had experienced 1875 mm rain of which about 72% occurred during the monsoon. The duration of maximum rainfall was 16 days in July and the duration of minimum rainfall was 2 days in the months of November, December and January. So it had rained in all the months of that year.

Wind Directions

In Tangail district, general direction of the wind is same as Jamuna Basin, south-west changing to east towards the head of the valley for the greater part of the year, with a north and north-west direction during the month of April and May. It is observed that winds are stronger in summer in the months of April and May (3 to 6.5 knots) than in winter in the month of November and December (1.5 to 3.0 knots).

Hydrology

River, Canal/ Khal and pond are the hydrological components of the Paurashava. Total length of this river within the Paurashava area is 4.13 km and area is about 32.59 acres. The canals are linked with the rivers Paurashava surrounded by. In dry season, most of those canals are using as agriculture land and in the rainy season they submerges lowlands of the Paurashava. The ponds are spottedly located around the Paurashava. Small numbers of them are larger than one acre. In dry season, ponds water are using for bathing and washing purposes. Canal water generally uses for irrigation purposes.

12.6.3 Solid Waste and Garbage disposal

12.6.3.1 Household Waste

Condition of solid waste management system is not satisfactory. In fact, there is no waste management system exist in the municipality. People are found to dispose their waste into the nearby low land, ditches, drains or in the vacant land. There are only 4-5 dustbins spread over the whole municipality but no proper system for the collection and disposal of the wastes. Paurashava has not a planned dumping site. Therefore, there is risk of land and water pollution. Paurashava has not a planned dumping site. So there is risk of land and water pollution. There is good opportunity of involving NGO and CBO in this process.

12.6.3.2 Industrial Waste

No industrial waste managrment system available in the Paurashava. Waste are dumping into the nearby low land, ditches, drains or in the vacant land.

12.6.3.3 Kitchen Market Waste

Kitchen market waste is being dumped on the low lands available around the market.

12.6.3.4 Clinical / Hospital Waste

Existing health facilities are not significant in number. There is no arrangement for clinical waste management in the Paurashava. The clinics and hospital used to dump solid wastes here and there or nearby ditches. This activity may bring serious health hazard to the inhabitants specially the nearby dwellers.

12.6.3.5 Waste Management System

Solid waste collection and disposal in Kaliakair Paurashava is the responsibility of Paurashava authority. The logistics for collection and disposal of solid wastes include 15 sweepers for collection and 1 garbage truck for transportation. Solid waste from the point of generation to the final disposal can be grouped into three functioned elements -

- Waste generation and storage
- Collection
- Final disposal

Waste Generation and storage: Households within the area are producing around 2.00 tons of domestic solid wastes per day.

Collection: The waste collection is done in the following three stages:

- The residents themselves take domestic refuses from households to the intermediate dumping points.
- Street and drain wastes are collected and dumped at intermediate disposal points by the municipal sweepers and cleaners.
- Final collection from the intermediate points and its disposal to the dumping yard by the conservancy worker.

Final disposal: The authority used to dump in low lands on the basis of land owner's interest or nearest ditches.

12.6.3.6 Latrine

Toilet system of the study area is mostly categorized as pucca and katcha. In spite of this, Paurashava has a modest development of pucca toilets in government zones. Sewerage system has not been introduced on a trial basis as to their popularity and acceptance. Ownership of toilets varies widely in most of the Wards. Most of the households have their own toilets and at the same time there is joint toilets found in slum areas. Sanitary toilets or pucca toilets are comparatively good in all the Wards. Only 7 % katcha toilet is found in the Paurashava and owner of those toilets are poor people.

12.6.3.7 Industry

Industrial/ Processing and Manufacturing activity in Kaliakair Paurashava mainly includes garments, poly and cable industries, handicraft, rice mill, saw mill, ice factory, seed processing industry, bakery factory and other manufacturing and processing activities. Major industrial/manufacturing concentration is seen in Ward No 07 and occupied 158.61 acres area.

The small industrial output produces in the local market. It is also found that those establishments have problems and potentialities. Careful consideration will help to resolve those problems and adoption of necessary policy initiatives will help to flourish the existing units and draw more investors and entrepreneurs to set up new manufacturing industries, which will be based mainly on local raw materials.

12.6.4 Brick Field

There is some brickfield is in the Paurashava premises.

12.6.5 Fertilizer and Other Chemical Use

The fertilizer and chemical uses in the agriculture field for increasing agriculture production are Urea, Potash, Gypsum and Nitrogen Sulphate, Bashudin, Diazinon, Sumithion and Padan. Those chemicals are being contaminated with the surface water and create water pollution. Those chemicals and insecticides are creating water pollution of the Turag river.

12.6.6 Pollutions

Pollution is the introduction of contaminants into an environment that causes instability, disorder, harm or discomfort to the ecosystem i.e. physical systems or living organisms. Pollution can take the form of chemical substances, or energy, such as noise, heat or light energy. Pollutants, the elements of pollution, can be foreign substances or energies, or naturally occurring; when naturally occurring, they are considered contaminants when they exceed natural levels. The major forms of pollution are air pollution, water pollution, soil pollution and noise pollution.

Water Pollution

Water is considered polluted when it is altered from the natural state in its physical condition, and chemical and microbiological composition, so that it becomes unsuitable or less suitable for any safe and beneficial consumption. The used water of a community is called wastewater, or sewage. If it is not treated before being discharged into waterways, serious pollution occurs. Water pollution also occurs when rain water runoff from domestic waste and from agricultural land makes its way back to receiving waters (Ponds, Canals and Beels) and into the ground.

In Kaliakair Paurashava there are 50 ponds, 256 ditches, 7 khal and 1 river as sources of surface water. The type of surface water is fresh in Kaliakair. Surface water pollution has been found in the study area originating from the use of insecticide and chemical fertilizers in crop fields. Wash out by rain water from crop fields to nearest water sources with chemicals is causing water pollution. Cattle bathing and flow of waste water from domestic use and rain off into the khals and river have also identified as reasons for surface water contamination. The Paurashava authority has been not yet taken any initiatives to control surface water pollution.

Ground water pollution also exists in Kaliakair Paurashava. About 20-30% tube wells are found with iron contamination. Survey found no salinity problem in its ground water. According to environmental study 2009 and collected data from Department of Public Health and Engineering (DPHE), water table fluctuates in the wet and dry season. In the wet season ground water table found within 15-20 ft and in the dry season it goes down to 35-50ft.

Air Pollution

Sources of air pollution in Kaliakair Paurashava are not much. Survey result reveals that there are only two brickfields in the Paurashava but no other noxious air polluting industries. Only source of air pollution is heavy movement of vehicles on the Dhaka-Tangail Highway and the roads in and around the Market area. Paurashava has a large number of small manufacturing developments e.g. saw mill, rice husking mill and poultry firms which creates huge column of smoke and hot gases. Air pollution depends on the level of concentration of pollutants in the air. In that consideration smoke of the vehicles cause little difference in the ambient air quality of Kaliakair Paurashava.

Soil Pollution

Soil pollution is basically about contaminating the land surface of the earth through dumping urban wastages indiscriminately, dumping of industrial waste, mineral exploitation and misusing the soil by harmful agricultural practices.

Soil pollution is occurring from extensive use of fertilizer in the agriculture lands and water logging. Extensive use of fertilizer is changing the bio-chemical composition and the lands are losing their productivity day by day. At the same way, water logging for four months in a year is settling non decomposable materials on lands and the lands are being polluted. Water logging, over time leads to the soaking of soils, impeding agricultural production. The water applied in excess as a stock pollutant accumulates in the underground hydrological system and causes damage to production.

Noise Pollution

Sound pollution is occurred during day time specially three specific areas of this Paurashava. At By-pass moore, Chandra Moore and Bazar areas. Some commercial establishments are developing here gradually and the intersection also turns to a crowded area. Buses are putting down passengers besides the road. So, there create congestions are the area turns to crowdie.

12.6.7 Natural Calamities and Localized Hazards

A disaster is the tragedy of a natural or human-made hazard (a hazard is a situation which poses a level of threat to life, health, property or environment) that negatively affects society or environment. Disaster can be classified into two categories: natural disaster and man-made disaster. A natural disaster is the effect of a natural hazard (e.g. flood, volcanic eruption, earthquake or landslide) that affects the environment and leads to financial, environmental or human losses. Man-made disasters are disasters resulting from an element of human intent, negligence, or error, or involving a failure of a man-made system. There is no remarkable cyclone and earth quake occurred in Kaliakair Paurashava yet.

Water Logging (Area, Duration, Reason, Causes, Etc)

This municipality has 50 ponds, 256 ditches and 7 khals. There is an opportunity to use these for draining out the rainwater. According to the environmental survey 2009, Kaliakair Paurashava does not suffer water logging so much in the rainy season. Water Most of the time water discharges to these water bodies.

Flood

No remarkable flood occurred during over the years at Kaliakair Paurashava.

Fire Hazard

No fire hazard record is found in the Kaliakair Paurashava. With the increase of population, chances of fire incidence may increase for offices, institutions, market places and industries. Electric short-circuit is mainly responsible for fire hazards in urban area. Human error may also cause incidence of fire hazard sometimes.

Other Hazards

There is no arrangement for clinical waste management. The clinics, hospitals and diagnostic centers used to dump solid wastes here and there or nearby ditches. This activity may bring serious health hazard to the inhabitants specially the nearby dwellers. There is an up-coming issue of land filling in the Paurashava area which will cause serious problem in the future. Survey team found private initiatives of filling the low lands, water bodies in different places of the Paurashava for developing private housing without any planning intervention.

12.7 Plan for Environmental Management and Pollution Control

12.7.1 Proposals for Environmental Issues

In Kaliakair Paurashava, increase of construction work and nodal commercial places noise pollution is took place. Air pollution is caused by dust emitted from saw mill, rice hushing mills and furniture shops. Also flood water and water-logging are creating health hazards. Dysentery, diarrhea, etc. diseases occurs due to Water logging. These above varies are extremely important uses of concern for the Paurashava. Pragmatic planning / solution and proper Drainage Master Plan are very pertinent issues which will be of utmost importance in planning the Kaliakair Paurashava.

However, implementation of activities like roads, drainage, bridge / culverts, housing and industrial establishments and bazars will radically change the natural topography and landuse pattern. The agricultural land will be converted into urban and semi-urban area. Existing scenic beauty will disappear; water bodies will lost and general slope will be diminished for earth filling due to urbanization. Therefore, in the process of preparation of Master Plan, Structure Plan and Ward Action Plan, consideration of those factors will be made for keeping the natural environment.

For a better living environment above environmental phenomenon should be considered with the systematic planning principles and regulatory measures. With these views, people's awareness should be increased about the fair living environment through different public activities. Arrangement of landuses should be provisioned for all the public and private organizations as their necessities.

12.7.1.1 Solid Waste Management Plan

Solid waste management is a crucial problem for the Paurashava. The Kaliakair Paurashava does not have the sufficient capability to handle the huge waste generated by the residents due to narrowness of roads, lack of local collection sites stand as impediments to waste management. Particularly in informal/spontaneous areas due to existence of narrow roads the garbage trucks can not enter for removal and transshipment of the garbage. In most places there is no road side open space for locating garbage bins. Garbage is often found to be disposed off on low lands. As a result rotten garbage spoils the local environment of the area posing health hazard of the local residents. No dustbin is in the Paurashava whereas the daily waste produced is about 3.00 tons and most of those garbages throw to the nearby low lands. At present there is

a duping site opposite side of the pouarshava. A new dumping site with a area of 3.78 acres A 5.32 acre dumping site was proposed at the ward no-1 and northern side of the Paurashava.

For an efficient solid waste management system, it is recommended to engage, CBOs, NGOs and micro enterprises on contract basis for collection and disposal of solid waste and street sweeping.

12.7.1.2 Open space, Wet-land and Relevant Features Protection Plan

- One central park cum stadium, 3 neighbourhood park has been proposed as open space for recreation of the city dwellers. Stadium and the areas for tourism development are prescribed in the extended areas.
- The authority named Bangladesh Sports Council in collaboration with the Paurashava authority may construct the stadium. The stadium should use regularly with various programs.
- The land prescribed for tourism development, Bangladesh Parjatan Corporation should be the responsible authority to implement those tourism components. Domestic tourists should be emphasized rather than international in considering establishment of tourism components. Rainwater harvesting will be the major component of this tourism site. This sector can improve economic capability of the Paurashava dwellers rapidly.

12.7.1.3 Pollution Protection Proposals

12.7.1.3.1 Industrial

Industrial/ Processing and Manufacturing activity in Kaliakair Paurashava mainly includes garments, poly and cable industries, handicraft, rice mill, saw mill, ice factory, seed processing industry, bakery factory and other manufacturing and processing activities. Major industrial/manufacturing concentration is seen in Ward No 07 and occupied 158.61 acres area.Following proposals have made for protection of industrial pollution:

- All the industries are in mixed-use areas. Some of them will be re-arranged and shifted to the proposed industrial site.
- A green buffer will create around the proposed industrial site; it will separate the area from adjacent landuses and at the same time, environment will be livable.
- In future, the proposed industrial site will also be identified as a site for polluting industry (as identified by the Directorate of Environment). In that, provision of recycling plant should be attached with the individual industry.
- Any brickfield should not be allowed in the Paurashava jurisdiction.

12.7.1.3.2Air / Water / Land / Sound

For a better living environment above environmental phenomenon should be considered with the systematic planning principles and regulatory measures. With these views,

people's awareness should be increased about the fair living environment through different public activities. Arrangement of landuses should be provisioned for all the public and private organizations as their necessities.

The Paurashava is rural based urban area. Canal and ponds and other water bodies still below the danger level of pollution. Let it should not be increased. Still people awareness is possible for reducing contamination of ground water. People may aware about the use of pesticides in agriculture field, solid waste disposal in a systematic manner and improved sanitation facilities.

12.7.1.3.3Other Pollution

At present, control of urbanization and dumping of clinical wastes are the major concern of environment pollution of the Paurashava. Controlled urbanization according to this plan may remove the pollution through urbanization. Control on area / use density, height density and bulk density are the means of pollution protection through urbanization. A specific site within the compound of health services should be provisioned, thus pollution through clinical wastes will be controlled.

12.8 Natural Calamities and Regular Hazard Mitigation Proposals

12.8.1 Protection Plans Addressing Natural Calamities

Change in Topography and Mitigation: The main ground slope of the study area is northeast to southwest direction. Natural topography of the Paurashava has already been changed for urbanization. Implementation of Master Plan activities like roads, drainage, bridge/ culvert, housing and industrial estates, bazars and growth centers will radically change the natural topography and landuse pattern of the study area. Agricultural area will be converted into urban and semi-urban area. Present green scenic beauty will disappear, water bodies will be lost and general slope will be diminished for earth filling due to urbanization.

1. Careful planning will be needed to minimize the change of topography.
2. Avoid water bodies during planning of roads, housing and industrial estates.
3. Practice good architectural/engineering design during planning of housing estates, buildings and the intersections of main roads.
4. Enhancement of plantation and gardening to increase the scenic beauty of the Paurashava.
5. Preserve the Beels with demarking buffer distance.

Landuse Change and Mitigation: Major portion of the study area is rural setup, with predominance of agricultural landuse. However, urban and semi-urban landuses are observed in the Paurashava and its surrounding areas. With implementation of the Master Plan, rural setup and agricultural landuse pattern will be changed radically into urban landuse type.

1. Keep water bodies and productive agricultural land free from urban development as long as possible. Vertical development may be encouraged rather than horizontal.

2. Careful planning is necessary to reduce change of agricultural landuse and rural setup.
3. Economic use of land should be emphasized.

Drainage Congestion and Mitigation: Drainage congestion may increase further with urban sprawl development. Faulty design, solid waste and rubbish dumping, encroachment and un-authorized structures, siltation, lack of renovation and re-excavation are the main causes of drainage congestion. Drainage system that exists in the study area is not well enough to carry the surface run-off properly. The outlets of these drainage networks are mostly connected with nearest khal and water bodies. These water body is filling up, as a result, drainage congestion generates. And thus many areas are subjected to water logging during the heavy rainfall causing inconvenience to the people of the area.

1. Make proper drainage network in new area considering the slope and local topographical condition.
2. Remove all unauthorized structures, which developed on drainage structures.
3. Prohibit the people in dumping of rubbish and solid waste in drain.
4. Regular cleaning and maintenance by the concerned authorities.
5. Demarcation of water bodies, which can act as retention pond to avoid water logging from heavy rainfall.

Groundwater Table Declination and Mitigation: Fall of groundwater table is a common phenomenon in the study area during dry period (February-May). With expansion of urbanization and industrialization through the Ward Action Plan, the groundwater table may further fall if present tradition of using groundwater is continued.

1. Introduce rainwater harvesting system and use in the study area.
2. Stop land filling of ponds and water bodies to maintain the groundwater level through recharge and leaching process.

Groundwater Pollution and Mitigation: Groundwater pollution due to manganese, iron and hardness is a major problem of the study area. With expansion of urban area, more dependency on groundwater sources may increase the pollution level of sub-surface water.

1. Use surface water of River for supply water.
2. Introduce rainwater-harvesting system.
3. Reduce dependency on groundwater.
4. Preserve surface water in ponds, khals, Beels, ditches and rivers for irrigation.

Noise Pollution and Mitigation: Although there is no data available on noise pollution of the study area, however, it seems that present noise level does not exceed the Bangladesh Standard. More noisy area may be the Bus Terminal area and Industrial and Market area. Hydraulic horn of buses and rickshaw bells are the main noise sources in the study area. However, some noises also generate during piling and construction works. Besides, welding workshops, saw mills, musical instruments and blacksmiths are also

common sources of noise pollution in urban areas. With expansion of urban area, the noise pollution will be increased for increasing number of motor vehicles, market places, industries, etc.

1. Stop using hydraulic horn in buses, trucks and other motor vehicles.
2. Declare some areas like hospitals, schools, parks, etc. as silent zone.
3. Control abnormally high noise from saw mill, old machines should be repaired or replaced.
4. Foundation of machines should be specially prepared to reduce noise.
5. Special type of silencer may be attached with the machines to reduce noise.
6. Welding and blacksmith workshops can be fenced with glasses to protect the passersby from possible pollution effects.
7. People constantly working in welding and blacksmith workshops should wear earplugs and glasses. Regular medical checkups can be carried out to identify possible health problems.

Air Pollution and Mitigation: Present climatic condition of the study area is sub-tropical monsoon. With the implementation of Master Plan this climatic condition is expected to continue if further global climatic change does not occur. However, rainfall may slightly decrease in the study area for cutting of trees and diminishing of green vegetation for urban development. Trees and green vegetation keep environment cool and enhance precipitation and rainfall. Temperature may remain same as present. Urban development keeping vegetation, plants, water bodies and new social forestation in homesteads, educational organizations, roads, embankment and parks will help maintain the climatic condition same as present.

Air-pollution is not a serious problem in the study area. Vehicular emission is also insignificant in the area. Industries are the main sources of air pollution. However, the air pollution will be increased in near future with increase of motor vehicles and industries. With the implementation of Master Plan more industrial zones will be developed which will also induce air pollution in the study area.

1. Use catalytic converter in buses, trucks, taxis and tempos.
2. Use CNG instead of petrol and diesel.
3. Impose ban on movement of sand carrying trucks and conservancy vehicles during office period.

Loss of Biodiversity and Mitigation: Urbanization like roads, infrastructure development, housing, commercial places, industrialization, etc. will replace the existing natural green environment to man made environment. Trees will be cut down, water bodies will be filled up and polluted; sugarcane, paddy, banana, papaya and vegetable production will be reduced and mango garden and bush will disappear for urban expansion in new area. Wild animals, birds and fishes will lose their habitats and as a result a big loss of biodiversity will happen for urban expansion.

1. Avoid critical ecological area and refugee sites from development activities.

2. Aware people for keeping some trees and bushes around the homesteads.
3. Increase tree plantation in roadsides and homesteads.
4. Preserve the Beels for aquatic birds and fishes and some bush areas as wildlife preservation sites.

Parasitic Diseases and Mitigation: Parasitic diseases like dengue, malaria and filaria are not common in the project area. However, with the expansion of urban area, the prevalence of these diseases may increase in the project area. During last 3 to 4 years, the country faces dengue problem although this problem was negligible. This problem may happen also in the Paurashava for increasing urbanization and industrialization.

1. Regular mosquito eradication program in the project area.
2. Dengue carrying mosquitoes live in fresh water of tire, cans, bottles and flower tubs. Segregation of old tires; cans and bottles are required before dumping.
3. Remove additional water of flower-tubs and refrigerator cans regularly.
4. Improve drainage system and remove waterlogged areas in the project.
5. Regular cleaning of drain and removal of water hyacinth and other aquatic plants are required from ponds, ditches, khals and Beels.
6. Use mosquito net during sleeping at both night and daytime.
7. Increase people's awareness on parasitic diseases and mosquito control.

12.8.2 Protection Plan Addressing Regular Hazards

- Most of the natural canals and water courses will be preserved and maintained. The ponds larger than 0.3 acres should be preserved as a water reservoir.
- To protect northern and southern part from annual flood, a road cum embankment including two sluice gates will be needed and these will be controlled by the Water Development Board.
- For the removal of drainage congestion, sufficient number of bridges and culverts should be provisioned during construction of roads.
- Indiscriminate land filling for expansion and construction of residential areas and buildings should be controlled with the imposition of agriculture policy.

12.8.3 Protection Plan Addressing Encroachment and Other relevant issues

- As a measure of protection from encroachment restrictive buffer zone will be created on both sides of natural canals and other watercourses (if necessary). Walkways and plantation will be needed for the protection of those buffer zones.
- Formation of appropriate legislation on solid waste management will be necessary. People encroaches canal and river through dumping of solid wastes. Encroachment on road and canal should be removed as early as possible with the formation of joined collaboration committee. This committee may be formed with the members from Paurashava, LGED, RHD and WDB.

- Using of waste as an unutilized resource and assisting in recycling of waste for conservation of resources and protection of environment.
- Introduces environmental education especially sanitary habits in school curriculum.

12.9 Plan Implementation Strategies

12.9.1 Regulations to Implement the Drainage and Flood Plan

The regulations which will be needed for the implement of drainage and flood plan are:

1. Section 3 of the **Acquisition and Requisition of Immovable Property Ordinance, 1982** is needed for acquisition of land in view to construct environmental components. The authority, according to the demand, will apply to the Deputy Commissioner for such acquisition.

2. Section 4 of the **Conservation of Environment Act, 1995** have prescribed duties and responsibilities of the Director. Most of those responsibilities are on the control of pollution.

3. Section 5 of the **"Play field, Open space, Park and Naural Water Reserviour Conservation Act, 2000"** will be needed for the preservation of playfield, garden, open space and natural tank of the Paurashava.
4. Section 28 (1, 2 and 3) of the **Forest Act, 1927** has prescribed regulations on village forest, which is necessary for the formation of village / Paurashava forest.

5. **Water Hyacinth Act, 1936** was enacted for preventing the spread of water hyacinth in Bangladesh and for its destruction. It is said in the section 5 that, no person shall grow or cultivate water hyacinth in any garden or in any ornamental water or receptacle. Again, according to the section 8(1) said, with a view to facilitating the discovery or destruction of water hyacinth, an Authorized Officer may, subject to any rules made under this Act, by a notice served in the prescribed manner, direct an occupier of any land, premises or water within a notified area to cause-

a) any branches of trees or shrubs on any such land or premises which overhang the edge of any river, stream, waterway, ditch, marsh, bil, lake, tank, pond, pool or pit to be cut back and any undergrowth or jungle thereon to be removed from such edge, within a distance specified in the notice, or

b) any vegetation appearing above the surface of any such water to be removed from the water, within such period as may be specified in the notice.

6. Section 7 of the **Water Resources Planning Ordinance, 1992** will be needed for the development of water resources available in the Paurashava.

12.9.2 Implementation, Monitoring, Evaluation and Coordination of the Plan

Implementation through Multi-Sectoral Investment Programme: Major infrastructure development works such as primary roads, water supply, drainage, etc., will largely be controlled by the Government. Public works requires efficient co-ordination through the Multi-Sectoral Investment Programme (MSIP).

Objective of a Multi-Sectoral Investment Programme (MSIP) will match a list of the development projects with the funding stream necessary to implement them. There are two basic activities that would determine the contents of MSIP. One activity would be to prioritize and schedule the investment projects of all public agencies so they will collectively help to achieve the development goals and objectives of the Urban Area Plan. Second activity would be to analyze the source and availability of fund for the prioritized list of development projects.

Implementation through Action Plans and Projects: Action Plans and Projects will be the implementation plans to solve problems at the local level. Action plans will take a direct approach toward plan implementation with a minimum of research, reports or elaborate planning methods. These projects will be easily identifiable and will require minimum resource.

Implementation through Development Control: Landuse zoning is one of several methods of plan implementation to be considered. In all cases where some form of development, landuse control may be applied; careful consideration requires the following ideologies:

- the purpose to be achieved by the development controls;
- where controls should be applied;
- what aspect of development needs to be controlled;
- what type of development controls are required;
- what degree or level of development control is required;
- who will be affected by the required control;
- who will be affected by the controls and in what manner;
- when the controls should be applied;
- what will be the likely impact of the controls;
- how and by whom will the controls be administered and enforced.

Development control as an instrument of plan implementation may be selectively applied within the Urban Area Plans. Development controls would also be varied in intensity and detail to suit the particular circumstances. It is important that they should be clear and easily understood by all parties concerned. Since the entire Paurashava Master Plan 'package' has become statutory, development controls associated with its component plans would also be statutory.

Implementation by Facilitating Private Investment: Another approach that would be taken by government toward plan implementation will be to guide and facilitate investments made by the private sector. Government can achieve this with relative ease and at very low cost by setting up a legal and operational framework, coupled with suitable incentives, to facilitate land consolidation, plot boundary readjustment, efficient

lay out of plots and provision of local infrastructure by the private sector. The benefits of this approach would be:

- increased efficiently of the urban land market would make, more private land available to urban households;
- would pass much of the development costs for local infrastructure to the private sector and land market mechanisms;
- would increase in land for development without large cash outlays by government to purchase land for development schemes; and
- would keep provision of land for community facilities virtually no cost to government.

Plan Monitoring

The Urban Area Plan would simply be tools for guiding and encouraging the growth and development of an urban area in a preferred manner. In a rapidly changing urban environment, the Urban Area Plan would require to keep up to date. If this is not done, within a few years it will be obsolete. Therefore, it is imperative that the requirement for regular updating of the Urban Area Plan be made a legal requirement.

For implementation of the various programme components of the Urban Area Plan appropriate administrative measures will have to be undertaken. This will essentially include project preparation and monitoring of their execution and evaluation. For carrying out all these activities appropriate institutional measures are also be needed.

Evaluation

Monitoring and evaluation of on going and implemented projects is essential to keep the future course of action on the right track. An on going project should be regularly monitored and handicaps identified to enable taking appropriate measures at the right time.

Post implementation evaluation is also needed to take appropriate measures correcting past errors-from project preparation to implementation.

The top level supervision has to be done by a high level supervisory committee headed by Paurashava Mayor, LGED representative and Local Government Ministry. Other members of the committee will be local Ward Councilors, local community leader/social workers and the Town Planner of the Paurashava. The committee will supervise implementation works regularly and issue necessary instructions to expedite the works of implementation.

Co-ordination

A Planning Section of Paurashava should have close interaction with the citizen of Paurashava at large in order to make people aware of the benefits of a good plan and, therefore, their social responsibility to promote plan implementation in one hand and also resist contraventions on the other. A specific interactive cell is recommended to operate in this regard with following responsibilities:

- Provide pre-application advice to residents, consultants and developers about landuse management issues and application procedures for the submission of development applications.
- Enforce planning and landuse management related legislation and zoning scheme regulations.
- Issue of property zoning certificates.
- Investigate and resolve landuse management complaints, illegal landuse and prosecuting contraventions.

Such interactive windows may be opened in various convenient locations to ensure ease of the answers to commonly asked questions may be shown in the internet. Besides, those may be shown in the print and electronic media time to time.

In spontaneous areas, while all out people's co-operation is needed for project implementation; there will also be some elements of negotiation. Negotiation will be particularly needed in case of road widening projects. It will be a crucial task for Paurashava to convince the affected people to give up their land for road use. Efforts should be made to convince the land owners on the ground of enhancement of property value due to road widening. In case people refuse to offer land free of cost necessary arrangements may have to be made for payment of compensation. This process of negotiation will be very critical, cumbersome and time consuming, and therefore, has to be handled with utmost care and patience. The best results can be accrued only by wining people's confidence. In case the authority fails to get peoples co-operation they should exercise power of compulsory acquisition of land. Attempts may be made to engage NGOs / CBOs to work as catalysts in negotiation.

CHAPTER-13

PLAN FOR URBAN SERVICES

13.0 Introduction

Sensible urban planning is critical to the healthy growth of cities. Unplanned growth leads a number of problems, creating misery for urban dwellers and making remedying of those difficulties. Yet flawed urban planning is little better, or perhaps worse, than no urban planning at all. It is thus important, when taking on such an enormous task as the drafting of an Urban Area Plan for a Paurashava, to ensure that the plan is well considered and likely to be conducive to good health and well-being of the urban dwellers.

13.1 Range and Content of the Urban Services

The Plan for Urban Services covers planning area of Kaliakair Paurashava for a ten years time-frame (from 2011 to 2021). It also comprises a report and maps.

The Plan concern where services will be located (expected development). It also indicates how the Structure Plan policies will govern the areas and the standard for services calculated (based on the population forecast).

Outline of the Plan gives guidance to the Paurashava how the urban services will be developed and be promoted, maintained with a coordinated manner.

The Plan has been divided into five main parts i.e. existing condition and demand of the services, implementation strategies, proposal, regulations needed for establishment and management of the services, monitoring and evaluation of the plan. Water supply, sewerage facility, electricity, telephone and gas supply are the major concern of this plan.

13.2 Analysis of Existing Condition and Demand of the Services

The Paurashava is not enough financial capability for development of urban services. With the development of physical condition of the Paurashava, substantial development will be needed for those services. Drinking water supply, sewerage and sanitation facilities and dumping of solid wastes should be emphasized as primary consideration. People are dependent on hand tubewell for drinking water. Absence of solid waste dumping ground creates health hazards. Absence of covered drain and sewerage system creates sanitation problem in the Paurashava. Those problems should be removed through the proper planning and design.

Water Supply: Water supply network is not available in the Paurashava area. 100% of the households are using hand tube wells as main source of drinking and cooking purpose. 80% of the residents use pond water for washing and bathing purpose. About 1886 tube wells are available in the entire Paurashava area. From a study made by Department of Public Health Engineering (DPHE) in 2003, 4.71% of the total tube wells are contaminated by arsenic. Ground water level during dry and wet seasons are 21ft and 10ft respectively.

Gas: Gas supply is available in the town centre of Kaliakair Paurashava area. But the coverage is not so much.

Solid waste management: Solid waste collection and disposal in Kaliakair Paurashava is the responsibility of Paurashava authority. The logistics for collection and disposal of solid wastes include 10 sweepers for collection and 1 garbage truck for transportation. There are 4 dustbins and one dumping site in the Paurashava, CBO or NGO based collection system does not exist within the Paurashava area.

Solid waste from the point of generation to the final disposal can be grouped into three functioned elements:

- Waste generation and storage
- Collection
- Final disposal

Waste Generation and Storage

Households within the area are producing 3 tons of domestic solid wastes per day according to Kaliakair Paurashava.

Collection

The waste collection is done in the following three stages:

- The residents themselves take domestic refuses from households to the intermediate dumping points.
- Street and drain wastes are collected and dumped at intermediate disposal points by the municipal sweepers and cleaners.
- Final collection from the intermediate points and its disposal to the dumping yard by the conservancy worker.

Swerage facility:

The Sewerage system so far has not introduced in the Paurashava area. Maximum households build individual septic tanks for disposal of human excreta; they constructed this on their own initiatives. Among the total 2848 holdings, 1526 households have sanitary latrines (53.58%) of septic tank type and the rest have unsanitary latrines. There are four public toilets within the Paurashava area. No latrine is connected to drain, most of the latrines are constructed by the own initiatives of the Paurashava residents.

Electricity: The Power Development Board (PDB) at present is providing electricity facility within Paurashava area. There is there electric sub station within the Paurashava area. Electric poles of different sizes exist in the study area to carry HT and LT line. High voltage towers are distributed evenly and transformers are used to transform the high voltage to low voltage for distributing to the clients.

Telecommunication There is a telephone exchange having a capacity of 200 lines maintained by Bangladesh Telecommunication Company Limited (BTCL) in the Paurashava area. At present there are 50 land telephone users in the area. There are also

mobile phone networks of GrameenPhone, Robi, Citycell, Banglalink, Airtel and Teletalk which cover the entire study area.

Other urban services:
Waste transfer station, dumping site, pulic toilet, and slaughter house should consider as urban services.

Projection
The projection of utility service depends on the population growth and need assessment of the Paurashava inhabitants. After completion of population projection it is found that, population of the planning area will be 345237 in the year 2031. Projection on utility services also depends on present condition of urban services and future demand of those services.

Demand analysis: Existing utility facilities of the Paurashava are not sufficient and established without following any standard. Therefore, Team Leaders of all packages and urban planners from Project Management Office (PMO) have worked out and prepared different standards for projection of future facilities as per the requirement of Paurashava. Following of those standards have considered for the future demand with ensuring the quality and quantity of utility facilities.But in context of present scenario and practical situation proposal has been made.

Table 13.1: Standard of utility facilities and future need

Types of Land Uses	Recommended Standard	**Existing (acre)**	**Future land requirement (2031)**	**Proposed Land (acre)**	**Percent (%)**
Water supply	1.00 acre/ 20,000 population	0.00	17.26	**0.29**	-
Gas Station	1.00 acre/ 20,000 population	0	17.26	**0**	-
Solid waste disposal	4-10 acres/ Upazila HQ	0.12	10.00	**8.14**	-
Waste transfer station	0.25 acres/ per transfer station	0	0	**0.89**	-
Electric sub-station	1.00 acre/ 20,000 population	0.18	17.26	**0.18**	-
Telephone exchange	.5 acre/ 20,000 population	0.10	8.63	**0.10**	-
Fuel station	.5 acre/ 20,000 population	0.13	8.63	**0.13**	-
Slaughter House	As per requirement	-	-	**0.73**	-
Public toilet	As per requirement	-	-	**0.23**	-
Others	As per requirement	-	-	**1.32**	-
Total		0.53	79.04	**12.01**	**0.18**

13.3 Proposals for Addressing Urban Services and Implementation Strategies

Following strategies will be followed for implementation urban services in the planning area:

- Cost for service development will be promoted in phases, based on comprehensive plan for the demarcated entire Paurashava areas. This process will reduce cost.
- Some areas will be targeted as new urban areas where urbanization is likely to be rapid and imminent.

- Except waste disposal all other services (Water Supply, Sewerage, Electricity, telephone and Gas) will be provided by the concerned service giving agencies.

Water supply: Location of **water treatment plant** may be on a large plot (on 0.30 acres of land) with good access, close to source of water. It should be located upstream of any polluting development. **Water reservation tanks** may be constructed on medium size plot in key locations throughout the Paurashava, preferably in an elevated positioning relation to the area it is intended to serve, so as to maintain / increase pressure.

Sewerage facilities: Location of **sewerage treatment plant** may be on large plot (on 0.30 acres of land), preferably on outskirts of the Paurashava. Sewerage pumping station may be located on small plots throughout the Paurashava and a system should be introduced.

Electricity: Existing **Electricity power station** may be developed into **132/33KV switching station.** These can be accommodated on the plots they serve (industries) or in road corridors.

Telephone: There is no need of **telephone exchange** for the Paurashava. If required, it will need a medium size plot (on 0.19 acres of land), unless it also has to accommodate a transmission / reception tower, in which case it will require a fairly large plot. Medium sized plot will be needed for **local exchange**, central to its catchment area. **Street exchange** may be located on small plot in road corridor.

Gas supply: The standard for **gas manifold station** may be located on small to medium sized plot (on 0.30 acres of land) on the main ring. **Upazila regulator station** may be located on small plots throughout the Paurashava. These will be located at the break-off point on the main line, where smaller diameter spurs extend into the area that the gas will serve.

Map 13-1: Existing Urban Services

13.3.2 Proposals for Urban Services

For existing urban services, the Paurashava will need to establish a communication with each of the appropriate implementing agencies the following:

- Which of the existing services run, not currently in road corridors, could or should be relocated into road corridors to facilitate planned development bearing in mind the cost implications of doing this.
- The corridor reservations that should be applied to the service networks that cannot be moved.
- The means of establishing and maintaining these reservations, free from other development.
- For future expansions of the networks (in case of sewerage, possibly a new network), the Paurashava will need to establish with the appropriate implementing agency what the future requirements are, so that reservations can be applied and maintained. The Paurashava will need as part of this process:
- Try to ensure that secondary, tertiary and where possible primary networks are located within existing or proposed road corridors to minimize the requirement for separate land reservations. In most cases, it is known that this can be achieved. The likely exception will be primary electricity networks. The scale of this will demand separate land reservations.
- Where this cannot be achieved, agree with the relevant agency about the size of the reservation required, its alignment and approximate time-scale of implementation.
- To adopt the agreed reservation and ensure that it is maintained. When development applications are received which impinge upon this reservation, the Paurashava should not permit the development within the reservation, but ensure that it will be made to setback to the limit of the reservation.

Types of urban services that will need to be considered within the Paurashava are indicated below:

Water supply: Within all road area there should be provision of installation of water supply network and about 0.29 acres of land has earmarked for office or relevant activity.

Solid Waste Management: A community waste management system has proposed for this Paurashava.So, there is no need of transfer station only two duping site which was proposed with an area of 6.99 acres will sufficient for this facility.

Sewerage facilities: If a sewerage network were to be installed, the sewerage originating throughout the Paurashava would be carried by means of underground pipes and culverts. These should be accommodated within road reserves.

Electricity: Primary networks; principally 132KV, pylon supported power lines from the existing power stations which will enter the Paurashava at purpose built switching stations. The switching stations will usually be located at the fringe of the Paurashava.

Secondary networks; 33KV or 11KV pole mounted power lines, although in cases the 33KV lines can also be pylon mounted. The 33KV lines will originate at the above mentioned switching station and supply power around the Paurashava to smaller switching stations at key locations around the Paurashava where they will be down-sized to 11KV. These, in turn, will supply power to more localized electricity sub-stations. The pole mounted lines can be located within principle road corridors (primary and district distributors). Pylon mounted lines should be allocated their own reserve. **Tertiary networks**; at the localized sub-stations, the 11KV power will be down-sized for distribution to individual premises. Power leaving these sub-stations is usually carried by 415V pole mounted lines. These can be accommodated within road corridors.

Telephone: Telephone exchange lines can be either overhead, pole mounted or underground using newer Optical Fiber Cables. Both of these are carried to localized exchanges and then onto small roadside exchanges. From these connections are carried on poles to individual premises. All networks can be accommodated within road reserves.

Gas supply: All gas line will be supplied by varying diameter underground pipes. These can be accommodated in road reserves.

Other urban services: Waste transfer station, water station, dumping site, pulic toilet and slaughter house has considered as urban services.

Table 13.2: Proposed new urban services.

Proposed facilities	Ward No.	CS Mouza Name	Plot No.	Area in Acre
Dumping Site-1	2	Janurchala_051_01	90 part, 91, 92 part, 93-94	4.23
Dumping Site-2	9	Safipur_161_01	16 part, 17, 21 part	3.91
Slaughter House-1	1	Shemoiltali_141_02	409	0.49
Slaughter House-2	7	Chandra_154_02	2014 part, 2015 part	0.24
Public Toilet-1	1	Shemoiltali_141_04	32 part	0.07
Public Toilet-2	7	Chandra_154_01	104 part	0.15
Waste Transfer Station-1	1	Shemoiltali_141_04	32 part	0.16
Waste Transfer Station-2	6	Baro Kalampur_148_02	345 part, 363 part	0.73
Waste Transfer Station-3	7	Chandra_154_01	94 part, 104 part	0.28
Water Station	3	Goalbathan_144_02	610 part, 619 part	0.29
Total				10.98

13.3.3 Regulations to Address the Proposals

According to the 2nd Schedule, Sl. No. 10 of **Local Government (Paurashava) Act, 2009** the Paurashava may provide supply of wholesome water sufficient for public and private purposes. Frame and execute water supply scheme for the construction and maintenance of such works for storage and distribution of water. In case of private sources of water supply, it is said that, all private sources of water supply within the Paurashava shall be subject to control, regulation and inspection by the Paurashava. No new well, water pump or any other source of water for drinking purposes shall be dug, constructed or provided except with the sanction of the Paurashava.

The regulations, as discussed above, will be needed for provisioning of drinking water supply both Paurashava and private sources in the Paurashava.

The sewerage facilities may be provided by the Paurashava and Directorate of Public Health Engineering (DPHE). According to the 2nd Schedule, Sl. No. 12, of the Local Government (Paurashava) Act, 2009, Paurashava may provide an adequate system of public drains and all such drains shall be constructed, maintained, kept, cleared and emptied with due regard to the heal and convenience of the public. All private drains shall be subject to control, regulation and inspection by the Paurashava.

Map 13-2: Proposed Urban Services

Public Health (Emergency Provisions) Ordinance, 1944 (Ordinance No. XXI of 1944) was enacted in 20th May 1944. According to the section 2(e) "public health services" and "public health establishment" include respectively sanitary, water-supply, vaccination, sewage disposal, drainage and conservancy services and establishment maintained for the purposes of such services, and any other service or establishment of a local authority which the Government may by notification in the Official Gazette declare to be a public health service or public health establishment for any purpose of this Ordinance.

Based on the regulation, the Directorate of Public Health Engineering (DPHE) is performing activities for drinking water supply. If DPHE likes to render their service according to the water supply network as presented in this plan, the regulation will be the safeguard for them.

East Pakistan Water and Power Development Authority Rules, 1965 (No. 4-1(E) was prepared and notified in 12th July 1965. The Power Development Board (PDB) is empowered for power generation under the guidance of Electricity Act, 1910. At present, PDB and Rural Electrification Board (under the Rural Electrification Board Ordinance, 1977) is performing the role relevant with the electrification of the Paurashava. The existing authorities will be needed for electrification of the Paurashava according to the guidelines presented in the plan.

Telegraph and Telephone Board Ordinance, 1975 (Ordinance No. XLVII of 1975) was enacted in 30th August 1975. A Telegraph and Telephone Board (T&T Board) was composed through this Ordinance. Section 6(1) of the Ordinance has prescribed the functions of the Board and said, it shall be the function of the Board to provide efficient telegraph and telephone services and to do all acts and things necessary for the development of telegraphs and telephones. In the Paurashava, at present, a T & T Board is performing the functions prescribed in the section 6(1). T & T Board is the sole authority for performing the same and it will be continued in future also. But, the Mobile telephone system generates a revolution in the society. Most of the people are depended on the Mobile phone system. The plan does not consider this system.

13.3.4 Implementation, Monitoring and Evaluation of the Urban Services Plan

Implementation through Multi-Sectoral Investment Programme: Major infrastructure development works such as primary roads, water supply, drainage, etc., will largely be controlled by Government. Public works requires efficient co-ordination through the Multi-Sectoral Investment Programme (MSIP).

Objective of a Multi-Sectoral Investment Programme (MSIP) will match a list of the development projects with the funding stream necessary to implement them. There are two basic activities that would determine the contents of MSIP. One activity would be to prioritize and schedule the investment projects of all public agencies so they will collectively help to achieve the development goals and objectives of the Urban Services Plan. Second activity would be to analyze the source and availability of fund for the prioritized list of development projects.

Implementation through Action Plans and Projects: Action Plans and Projects will be the implementation plans to solve problems at the local level. Action plans will take a direct approach toward plan implementation with a minimum of research, reports or elaborate planning methods. These projects will be easily identifiable and will require minimum resource.

Implementation through Development Control: Landuse zoning is one of several methods of plan implementation to be considered. In all cases where some form of development, landuse control may be applied; careful consideration requires the following ideologies:

- the purpose to be achieved by the development controls;
- where controls should be applied;
- what aspect of development needs to be controlled;
- what type of development controls are required;
- what degree or level of development control is required;
- who will be affected by the required control;
- who will be affected by the controls and in what manner;
- when the controls should be applied;
- what will be the likely impact of the controls;
- how and by whom will the controls be administered and enforced.

Development control as an instrument of plan implementation may be selectively applied within the Urban Services Plans. Development controls would also be varied in intensity and detail to suit the particular circumstances. It is important that they should be clear and easily understood by all parties concerned. Since the entire Paurashava Master Plan 'package' has become statutory, development controls associated with its component plans would also be statutory.

Implementation by Facilitating Private Investment: Another approach that would be taken by government toward plan implementation will be to guide and facilitate investments made by the private sector. Government can achieve this with relative ease and at very low cost by setting up a legal and operational framework, coupled with suitable incentives, to facilitate land consolidation, plot boundary readjustment, efficient lay out of plots and provision of local infrastructure by the private sector. The benefits of this approach would be:

- increased efficiently of the urban land market would make, more private land available to urban households;
- would pass much of the development costs for local infrastructure to the private sector and land market mechanisms;

- would increase in land for development without large cash outlays by government to purchase land for development schemes; and
- would keep provision of land for community facilities virtually no cost to government.

Plan Monitoring

The Urban Services Plan would simply be tools for guiding and encouraging the growth and development of an urban area in a preferred manner. In a rapidly changing urban environment, the Urban Services Plan would require to keep up to date. If this is not done, within a few years it will be obsolete. Therefore, it is imperative that the requirement for regular updating of the Urban Services Plan be made a legal requirement.

For implementation of the various programme components of the Urban Services Plan appropriate administrative measures will have to be undertaken. This will essentially include project preparation and monitoring of their execution and evaluation. For carrying out all these activities appropriate institutional measures are also be needed.

Evaluation

Monitoring and evaluation of on going and implemented projects is essential to keep the future course of action on the right track. An on going project should be regularly monitored and handicaps identified to enable taking appropriate measures at the right time.

Post implementation evaluation is also needed to take appropriate measures correcting past errors-from project preparation to implementation.

The top level supervision has to be done by a high level supervisory committee headed by the Paurashava Mayor, representatives of the service giving agencies and Local Government Ministry. Other members of the committee will be local Ward Councilors, local community leader/social workers and the Town Planner of the Paurashava. The committee will supervise implementation works regularly and issue necessary instructions to expedite the works of implementation.

CHAPTER-14

INTRODUCTION

Mere preparation of Ward Action Plan will not be sufficient due to resource constraint. Securing Right of Way (ROW) for circulation network and utility corridor needs huge funds which cannot be met from public exchequer. To minimize the cost of development Paurashava should involve the landowners in the development process. This can be achieved by declaring some of the developing corridors as concession for development through people's participation where landowners will become development partners and share the development cost through contribution of a portion of their land. Paurashava has to follow Ward Action Plan for those areas utilizing development techniques like Guided Land Development or Land Readjustment. Paurashava has to show strong determination and willingness as this is a very difficult task to accomplish involving hundreds of people. Paurashava has to increase its efficiency and do the work at the appropriate time.

14.1 Background

There are several patches of land in the Paurashava area where planned development can be achieved through use of different land development techniques. One of those techniques is Land Readjustment Technique, may be practiced for the development of Ward as a Ward Action Plan. The plan prepared for designated areas in conforming to the land development techniques is known as Action Area Plan.

It is also expected that following successful implementation of the Ward Action Plan in one side, management would be more efficient in handling projects and in another people residing in unplanned areas would feel the benefit of such Action Plan ensuring more effective community participation.

14.1.1 Content and Form of Ward Action Plan

The Ward Action Plan is the plot to plot details of the Master Plan. On that sense it is a micro-level physical development plan. The contents of the Ward Action Plan have been set in the following manner. Prior to plan making a background was set with respect to the demography of the area, where basic statistics of the demographic parameters were discussed. Next, the most critical planning issues were highlighted and reviewed that included, the problems associated with poor conditions of road and drainage, water supply, unplanned development, lack of threshold population. The plan was followed next after review of existing land used and infrastructure. The plan includes, proposed land use zoning, circulation network, drainage plan, municipal services development recommendations, education infrastructure development proposals. The Ward Action Plans were prepared ward wise and all the above issues were repeated for each ward.

14.1.2 Linkage with the Structure and Urban Area Plan

The Ward Action Plan for the Paurashava has been prepared on the basis of following principles relevant with the Structure Plan and Urban Area Plan:

- Environment friendly sustainable development of the area.
- Town functions to develop as per major landuse zones.
- Effective drainage system through minimum hindrance to Flood Flow zones.
- Safe residential areas at proximity to place of work or major communication routes.
- Smooth and effective functioning of industries, specially agro-based industries.
- Safe yet faster connectivity.
- Develop to serve the surrounding hinterlands.

14.1.3 Approach and Methodology

For the preparation of Ward Action Plan the planning area has been sub-divided into Nine Planning Zones according to the individual Ward. Immediate necessary action will be required for Ward Action Plan and this is the key outcome of Ward Action Plan. Where, what type of action will be required and how the action will be performed prescribed in the plan.

Pro-people Urban Planning

The Ward Action Planning approach utilizes in the Paurashava Master Plan concentrating mainly on the building of infrastructure and roads to facilitate the movements of vehicles. In this scenario, Paurashava society would become steadily more privatized with private homes, offices and commercial activities, while all-important public component of urban life is likely to slowly disappear.

The landuse and transport interaction for a modern city should be directed toward "Planning for people, not for vehicles, roads or buildings". Given the problems of alienation, crime, fear of strangers and the breakdown of civic life, it is increasingly important to make cities inviting so that people can meet their fellow citizens face-to-face and experience human contact with those unknown to and different from them directly through their senses. Public life in high quality public spaces is an important part of a democratic society and full life.

Evidence-based vs. Arbitrary Planning Approach

In the era of globalization, where information on any number of issues and about any number of places is readily accessible, there is no need for localities to continue making the same mistakes as they did when operating in an information and experience vacuum. While urban planning is of course a complicated process, it is also true that some universals exist in terms of what works and what does not. The experiences of urban areas adopting commercial-based and people-based approaches make clear the effects of either method, and many guides are now available on implementing planning approaches that are good for the natural environment and for urban dwellers.

Given the widespread availability of such information, it is highly regrettable that important landuse and transport policy-decisions should adopt either any knowledge-based or scientific analysis. Instead, arbitrary or so-called "common sense" approaches

should not be utilized which may favour the rich, including bureaucrats and developers with little concern for the betterment of society overall.

Although, it is a demanding task to represent the complex dynamics of urban landuse changes that are consistent with observable data, significant progress has been made in recent years in the country in forecasting and evaluating landuse change on the basis of dynamic and causal relationships between such factors as transport and landuse, and built environment and socio-economic processes.

With the advance of the knowledge-base and technology-base, detailed and extensive urban form and function data is becoming increasingly available, with great potential to provide new insights for sustainable urban planning which preserves the eco-system and maintains or even increases social equity.

Yet no attempt was made in the preparation of Upazila Master Plan / Landuse Plan (in 1980s) to conduct any analytical or empirical analysis using data related to interactions between the built environment, transport, landuse and other socio-economic processes.

Again, in Paurashava Master Plan, the Geographic Information System (GIS)-based technology is mainly used for mapping and visual displays, which are limited to static displays of past and current data sets. That is, the displays only portray the current state of the system, with neither the reasons given for its condition nor possible alternate futures provided. As a result, policymakers and planners are now facing tremendous difficulties, lacking as they do any insight into future urban growth and the potential impacts of various models.

Hypothetical Planning Approach under Upazila Master Plan / Landuse Plan, no comprehensive data collection exercise was undertaken to estimate landuse requirements for the Paurashava. As a result, all the landuse proposals of that plan were hypothetical in nature, providing no insight into how the actual landuse demand for various purposes will meet in future.

Yet it is not logical to develop a Ward Action Plan, which represents the lowest tier of the planning hierarchy, without providing precise landuse allocations for different functional purposes.

Furthermore, in the Paurashava Plan, a significant portion of existing open space and agriculture land have been allocated for private developers required as per the 2031 population projection. This excess land for property developers is likely not only to create landuse speculation but also indiscipline in future landuse development. More importantly, the preservation of land for open space and agriculture is vital for the health and viability of the Paurashava and its inhabitants.

14.2 Prioritization

Immediate action is being needed for the development of Wards. Those actions are presented here according to the priority:

1st Priority: Traffic Management and Engineering

- Improvement of intersections on the regional road, including a ranked program of roundabout construction and a reduced role and operation of Zebra Crossing.
- Removal of bus and non-motorized vehicles stops from junctions, restrictions.
- Better traffic police enforcement and additional resources.
- Adoption of design guidelines for road improvement and for parking and access arrangements in new developments.
- Priority for footpath reinstatement, signing of national standards and corrections to serious local road surface irregularities such as pole-bases.
- Enforcement of development control on the National Highway.

2nd Priority: Improvement of transport services

Encouragement of higher quality bus services by allowing higher fares for such services at least from Kaliakair to Dhaka.

3rd Priority: Improvement of drainage congestion

- Improvement of drainage congestion as specified in the drainage plan especially in the areas where the drainage conjestion is high.
- Control indiscriminate earth filling which may hamper natural drainage system of the Paurashava.
- Construction of box culverts before road construction/expansion as specified in the drainage plan.
- Remove encroachment from the natural drainage like ponds and rivers.
- Control earth filling activities on natural canals outside the Paurashava boundary.

4th Priority: Rainwater harvesting

The ponds indiscriminately located in the Paurashava and their size is not less than 0.3 acre is proposed for rainwater harvesting. At the sametime, solar energy may be produced using those proposed lands.

Implementation of the above mentioned components will be selected as priority project. The priority project comprises all those works identified for implementation during the plan period. These are urgently needed to alleviate existing monsoon flooding and to prevent the risk of inundation. As a result of questionnaire survey to locate areas of flooding and discussions with Paurashava.

The storm water drainage priority project includes the provision of adequately – sized silt traps, removal of obstructions. The major component of work is construction of missing-links to carry water from Paurashava Town Centre to the River.

14.3 Ward-wise Action Plan for Next Five Years

The priority mentioned in the Clause14.2 follows according to the Ward for next five years. Those priorities are the primary steps of development considering the year from 2014 to 2019.Possible ways of financing the Master Plan assumes that:

- Funds for construction of regional road and undertaking flood defence works will be obtained from GoB in the usual way and these will not be directly recovered from the beneficiaries in Paurashava.
- Funds for providing storm water drainage and construction of local road will be provided by loans for capital expenditure. These will be recovered from the Paurashava dwellers, primarily from taxes on property. Various loan conditions have been considered, the most onerous of which is GoB's standard on lending rate is 12.5% per annum interest, repayable over 20 years, including a 5-year grace period. It has been assumed that maintenance costs are directly recovered through local taxation.
- The implementation of Master Plan component will require funding either from grant or from increased local taxes.

14.3.1 Action Plan for Ward No. 1

Existing Situation:

It is situated on the north-west part of the Paurashava, Ward No. 2 on the south-east and Ward No.3 on the south-west. This area is a nodal place of the Paurashava. Paurashava bus terminal is located in this ward. Development pressure is comparatively high. Total planning area of the Ward is 429.86 acres. Among the total planning area, 144.66 acres land is under agriculture use, 127.03 acres residential, 19.93 acres commercial and others are in different category.

Development proposals of Ward-1:

Landuse Development*:* For planned development considering the existing landuse and future demand landuse proposal has made. Within the total area 32.87% land proposed for residential use, 7.93% is commercial use 7.48% mixed use, 6.66% are education & research, 8.15% agricultural and others are in different categories which are shown in the following table.

Table 14.1: Proposed landuse for Ward no-1

Sl. No	Landuse Type	Area Acre	Percentage
1	Urban Residential Zone	141.30	32.87
2	Commercial Zone	34.08	7.93
3	Mixed Use Zone	32.16	7.48
4	General Industrial Zone	6.07	1.41
5	Government Offices	3.12	0.73
6	Education and Research	28.64	6.66
7	Agriculture Zone	35.04	8.15
8	Water Body	78.91	18.36

Sl. No	Landuse Type	Area Acre	Percentage
9	Open Space	16.30	3.79
10	Circulation Network	43.89	10.21
11	Transport & Communication	3.31	0.77
12	Utility Service	0.81	0.19
13	Health Services	0.69	0.16
14	Community Facilities	1.34	0.31
15	Recreational Facilities	4.20	0.98
16	Forest Area	0.00	0.00
17	Restricted	0.00	0.00
Total		429.86	100.00

The proposed facilities considering the demand of the ward were shown in the following table including phasing. The proposed facilities under different category of land uses are also shown in the following table.

Table 14.2: Proposed facilities for ward no -1

Proposed facilitiles	Phase	CS Mouza Name	Plot No.	Area in Acre
Administration				
Administration Area	3rd	Tanglabari_142_00	168 part, 169 part, 170-176	3.00
Residential				
Planned Residential Area-1	2nd	Kaliakair_054_00	1009 part, 1018 part, 1025-1033, 1040-1048, 1486-1493, 1636	8.08
Commercial Facility				
Wholesale Market-1	1st	Tanglabari_142_00	64 part, 73 part	0.56
Transportation				
Bus Terminal-1	1st	Shemoiltali_141_04	24 part, 27, 29 part	0.80
Truck Terminal	2nd	Shemoiltali_141_04	26 part, 28, 29 part, 32 part	1.11
Tempo Stand-1	1st	Shemoiltali_141_01	12 part, 20 part, 115 part	0.27
Tempo Stand-2	1st	Shemoiltali_141_01	57 part, 59, 62 part, 63-64, 65 part	0.71
Steamer Terminal	1st	Shemoiltali_141_01	40 part, 121 part, 122	0.41
Educational Institution				
College-1	3rd	Kaliakair_054_00	752-761, 767-792, 796-806, 1222, 1268	16.01
High School-1	2nd	Kaliakair_054_00	793-795, 1225-1227, 1234-1243, 1244 part, 1245 part, 1266-1267	5.28
Primary School-1	1st	Kaliakair_054_00	1513 part, 1516-1521, 1522 part, 1523 part, 1532 part	3.11
Open Spce				
Playground-1	2nd	Kaliakair_054_00	1494, 1496, 1537-1541, 1542 part, 1543-1544, 1620	7.63
Utility & Service Facility				
Slutter House-1	1st	Shemoiltali_141_02	409	0.49
Public Toilet-1	1st	Shemoiltali_141_04	32 part	0.07
Waste Transfer Station-1	1st	Shemoiltali_141_04	32 part	0.16
Recreational Facilities				
Theater-1	2nd	Kaliakair_054_00	795 part, 1212 part, 1213 part, 1214-1221, 1223, 1224, 1461 part, 1621	4.05
Community Facilities				
Ward Center	1st	Shemoiltali_141_04	32 part	0.14

Proposal for road development:

A total of 11.81 km road has proposed for road network development of this ward of which some are new and some are widening. Within all roads 2.94 km road will construct within 1st phase. Recommended road network are shown in the following table.

Table 14.3: Proposed road for ward no-1

Road ID	Width (feet)	Length (m)	Phase	Type
RS03	60	669.32	1st	W
RS37	40	464.45	1st	W
RS05	40	599.38	1st	W
RS36	40	256.62	1st	W
RS05	40	203.95	1st	N
RL120	30	177.49	1st	W
RA152	20	419.76	1st	W
RA153	20	152.36	1st	W
RP01	120	1,068.12	2nd	W
RS06	40	386.05	2nd	W
RS23	40	676.08	2nd	W
RS23	40	193.37	2nd	W
RS23	40	321.38	2nd	N
RL121	30	822.87	2nd	W
RL85	30	404.26	2nd	W
RL86	30	267.95	2nd	W
RL95	30	398.53	2nd	W
RA161	20	327.78	2nd	W
RA147	20	368.59	2nd	W
RS51	40	413.55	3rd	W
RS25	40	1,029.95	3rd	W
RS49	40	109.25	3rd	W
RS49	40	410.64	3rd	N
RS49	40	382.93	3rd	N
RS51	40	518.25	3rd	N
RL123	30	107.73	3rd	W
RL123	30	318.12	3rd	N
RL124	30	344.76	3rd	N
Toal		11,813.49		

**Note: W= widening, N= New Road*

Proposal for drainage development:

A total of 11.81 km drain has proposed for drainage network development of this ward of which almost all are new. Within all drains 2.94 km drain will construct within 1st phase. Recommended drains are shown in the following table.

Table 14.4: Proposed drainage for ward no-1

Drain ID	Type	Length (m)	Phase
DP03	Primary	669.319	1st
DS37	Secondary	464.446	1st
DS05	Secondary	599.382	1st
DS36	Secondary	256.619	1st
DT152	Tertiary	419.757	1st
DT153	Tertiary	152.355	1st
DT05	Tertiary	203.954	1st
DT120	Tertiary	177.487	1st
DP01	Primary	1068.659	2nd
DS85	Secondary	404.257	2nd
DS86	Secondary	267.947	2nd
DS23	Secondary	676.082	2nd
DS23	Secondary	321.383	2nd
DS23	Secondary	193.367	2nd
DT161	Tertiary	327.780	2nd
DT147	Tertiary	368.589	2nd
DT121	Tertiary	822.866	2nd
DT95	Tertiary	398.525	2nd
DT06	Tertiary	386.819	2nd
DS123	Secondary	318.120	3rd
DS49	Secondary	410.638	3rd
SD51	Secondary	413.551	3rd
DS25	Secondary	1029.948	3rd
DS124	Secondary	344.757	3rd
DS49	Secondary	382.933	3rd
DS49	Secondary	109.246	3rd
DS51	Secondary	518.254	3rd
DS123	Secondary	107.733	3rd
Total		11814.773	

Map 14.1: Landuse Proposal for Ward No. 01

Map 14.2: Proposed Road, Drainage and Utility Services Plan for Ward No. 01

14.3.2 Action Plan for Ward No. 2

Existing Situation:

It is situated on the northern part of the Paurashava and Ward No. 1 on the north-west and Ward No.3 on the south. It is the core area of the Paurashava and development pressure is comparatively high. The Paurashava Bhaban, Upazilla Headquaer are also located in this ward.Major portion of IT Park is located wihin tnis ward. Total planning area of the Ward is 916.45 acres. Among the total planning area, 267.14 acres land is under agriculture use, 164 acres residential, 11.45 acres are governmental services, 8.09 acres commercial, 193.74 acres are industrial and others are in different category.

Proposals and Plans for Ward No. 2

Landuse Development*:* For planned development considering the existing landuse and future demand landuse proposal has made. Within the total area 27.05% land proposed for residential use, 1.44% is commercial use, 20.77% is Industrial and others are in different categories which are shown in the following table.

Table 14.5: Proposed landuse for Ward no-2

Sl. No	Landuse Type	Area Acre	Percentage
1	Urban Residential Zone	247.93	27.05
2	Commercial Zone	13.24	1.44
3	Mixed Use Zone	7.78	0.85
4	General Industrial Zone	190.34	20.77
5	Government Offices	10.15	1.11
6	Education and Research	8.36	0.91
7	Agriculture Zone	99.90	10.90
8	Water Body	158.41	17.29
9	Open Space	33.13	3.62
10	Circulation Network	53.54	5.84
11	Transport & Communication	0.50	0.05
12	Utility Service	4.59	0.50
13	Health Services	0.00	0.00
14	Community Facilities	20.83	2.27
15	Recreational Facilities	0.00	0.00
16	Forest Area	67.75	7.39
17	Restricted	0.00	0.00
Total		916.45	100.00

The proposed facilities considering the demand of the ward were shown in the following table including phasing. The proposed facilities under different category of land uses are also shown in the following table.

Table 14.6: Proposed facilities for ward no -2

Proposed facilitiles	Phase	CS Mouza Name	Plot No.	Area in Acre
Residential				
Planned Residential Area-2	2nd	Latifpur_353_00	173 part, 174-175, 184 part, 188 part, 89-1941, 532	5.22
Re-Settlement Residential	2nd	Janurchala_051_01	53-55, 90, 95-140	35.07

Proposed facilitiles	Phase	CS Mouza Name	Plot No.	Area in Acre
Zone				
Commercial Facility				
Super Market-1	2nd	Chandra_154_01	199 part, 200 part, 201-202, 203 part	2.05
Katcha Bazar-1	2	Janurchala_051_01	289 part, 290, 292 part, 301 part	1.00
Transportation				
Railway Station	2nd	Janurchala_051_02	819 part	0.20
Tempo Stand-3	1st	Latifpur_353_00	39 part, 57 part	0.27
Educational Institution				
High School-2	2nd	Latifpur_353_00	136, 139, 141-142, 144 part, 162 part, 163-165, 167	3.03
Open Space				
Playground-2	2nd	Janurchala_051_01	251, 255 part	1.26
Utility & Service Facility				
Dumping Site-1	2nd	Janurchala_051_01	90 part, 91, 92 part, 93-94	4.23
Community Facilities				
Central Mosque & Eidgah	1st	Latifpur_353_00	63 part, 66, 69 part, 70 part, 234 part, 238 part, 239-252, 264-266, 267 part, 440-464	15.42
Graveyard-1	1st	Janurchala_051_01	38, 39 part, 48 part, 50-51	2.93
Graveyard-2	1st	Goalbathan_144_02	520-524	4.38
Ward Center	1st	Latifpur_353_00	83 part, 85 part, 86, 88 part	0.42

Proposal of road development:

A total of 14.98 km road has proposed for road network development of this ward of which some are new and some are widening. Within all roads only 5.39 km road will construct within 1st phase. Recommended road network are shown in the following table.

Table 14.7: Proposed road for ward no-2

Road ID	Width (feet)	Length (m)	Phase	Type
RS03	60	1,739.70	1st	W
RS53	40	1,670.40	1st	W
RL127	30	4.56	1st	W
RL120	30	371.18	1st	W
RL119	30	295.57	1st	W
RA150	20	268.47	1st	W
RA151	20	194.76	1st	W
RA163	20	279.49	1st	W
RA154	20	469.30	1st	W
RA162	20	100.11	1st	W
RS24	40	737.59	2nd	N
RS47	40	90.00	2nd	W
RS21	40	399.85	2nd	W
RS24	40	1,108.29	2nd	W
RS27	40	1,800.25	2nd	W
RL93	30	105.06	2nd	W
RL129	30	77.74	2nd	W
RL126	30	382.08	2nd	W
RL94	30	237.62	2nd	W

Road ID	Width (feet)	Length (m)	Phase	Type
RL125	30	223.95	2nd	W
RS49	40	298.71	3rd	N
RS31	40	548.06	3rd	N
RS50	40	447.08	3rd	N
RS26	40	167.00	3rd	N
RS52	40	190.30	3rd	N
RS51	40	165.41	3rd	W
RS26	40	548.16	3rd	W
RS30	40	1,570.14	3rd	W
RS52	40	334.13	3rd	W
RS26	40	157.83	3rd	W
Total		14,982.79		

Note: W= widening, N= New Road

Proposal for drainage development:

A total of 14.98 km drain has proposed for drainage network development of this ward of which almost all are new. Within all drains 5.94 km drain will construct within 1st phase. Recommended drains are shown in the following table.

Table 14.8: Proposed drainage for ward no-2

Drain ID	Type	Length (m)	Phase
DP03	Primary	1739.702	1st
DT150	Tertiary	268.473	1st
DT151	Tertiary	194.759	1st
DT163	Tertiary	279.492	1st
DT154	Tertiary	469.298	1st
DT127	Tertiary	4.556	1st
DT53	Tertiary	1670.398	1st
DT120	Tertiary	371.180	1st
DT119	Tertiary	295.572	1st
DT162	Tertiary	100.108	1st
DS47	Secondary	90.000	2nd
DS21	Secondary	399.850	2nd
DS24	Secondary	1108.290	2nd
DS24	Secondary	737.592	2nd
DT93	Tertiary	105.061	2nd
DT129	Tertiary	77.735	2nd
DT126	Tertiary	382.078	2nd
DT94	Tertiary	237.621	2nd
DT27	Tertiary	1800.253	2nd
DT125	Tertiary	223.949	2nd
DS49	Secondary	298.707	3rd
DS51	Secondary	165.409	3rd
DS26	Secondary	548.157	3rd
DS30	Secondary	1570.614	3rd
DS50	Secondary	447.082	3rd
DS52	Secondary	334.128	3rd
DS26	Secondary	157.827	3rd
DS26	Secondary	167.000	3rd
DS52	Secondary	190.301	3rd
DT31	Tertiary	548.061	3rd
Total		14983.253	

Map 14.3: Landuse Proposal for Ward No. 02

Map 14.4: Proposed Road, Drainage and Utility Services Plan for Ward No. 02

14.3.3 Action Plan for Ward No. 3

Existing Situation:

The Ward is situated at weast side of the Paurashava. Dhaka-Tangail highway passes over this ward. This an urban fringe area and development pressure in this area is comparatively low. Total area of the Ward is 841.40 acres. Among the total area, agriculture use is 378.74 acres, residential 165.73 acres and 6.02 acres are commercial area.

Proposals and Plans for Ward No. 3

Landuse Development*:* For planned development considering the existing landuse and future demand landuse proposal has made. Within the total area 33.32% land proposed for residential use, only 0.81% is commercial use, only 1.05 % mixed use, 7.01% industrial zone, only 11.42% agricultural and others are in different category which are shown in the following table.

Table 14.9: Poposed landuse for Ward no-3

Sl. No	Landuse Type	Area Acre	Percentage
1	Urban Residential Zone	280.37	33.32
2	Commercial Zone	6.78	0.81
3	Mixed Use Zone	8.87	1.05
4	General Industrial Zone	58.97	7.01
5	Government Offices	24.59	2.92
6	Education and Research	71.99	8.56
7	Agriculture Zone	96.11	11.42
8	Water Body	68.24	8.11
9	Open Space	68.62	8.16
10	Circulation Network	82.58	9.81
11	Transport & Communication	6.31	0.75
12	Utility Service	0.29	0.03
13	Health Services	43.60	5.18
14	Community Facilities	24.11	2.87
15	Recreational Facilities	0.00	0.00
16	Forest Area	0.00	0.00
17	Restricted	0.00	0.00
Total		841.40	100.00

The proposed facilities considering the demand of the ward were shown in the following table including phasing. The proposed facilities under different category of land uses are also shown in the following table.

Table 14.10: Proposed facilities for ward no -3

Proposed facilities	Phase	CS Mouza Name	Plot No.	Area in Acre
Administration Area	3rd	Sreefaltali_139_00	446-459, 460 part, 461, 467, 480 part, 181-501, 758-759, 765-797, 985, 989-990	24.21
Proupashava Bhaban	3rd	Goalbathan_144_01	312 part	0.23

Proposed facilities	Phase	CS Mouza Name	Plot No.	Area in Acre
Residential				
Planned Residential Area-1	2nd	Latifpur_353_00	325, 341 part, 342-348, 351 part, 352-371, 379, 384	15.11
Planned Residential Area-2	3rd	Goalbathan_144_01	177-178, 179 part, 184-199, 200 part, 206-223, 225 part, 226-237, 240 part, 242 part	28.51
Commercial Facility				
Katcha Bazar-2	1st	Goalbathan_144_01	260 part, 261 part, 290 part, 294 part, 295, 296 part, 327, 1005, 1006 part	2.94
Transportation				
Railway Station	2nd	Goalbathan_144_01	366 part, 369 part	2.69
Tempo Stand-4	1st	Goalbathan_144_01	82-83, 94 part	1.05
Rickshaw Stand-1	1st	Goalbathan_144_01	300 part, 316 part, 317 part, 1089 part	0.89
Educational Institution				
University	3rd	Goalbathan_144_02	885 part, 886, 890 part, 891-896, 909, 937, 938 part, 966-981, 993, 1077, 1078	22.50
Medical College-1	3rd	Sreefaltali_139_00	520-529, 534-536, 540-553, 554 part, 560-563, 566-588, 596-600, 602 part, 603-611	14.52
High School-3	3rd	Goalbathan_144_02	750-752, 770-772	5.22
Primary School-2	2nd	Goalbathan_144_02	770 part, 771 part, 777 part, 778, 779 part	1.99
Open Space				
Community Park-1	2nd	Sreefaltali_139_00	719 part, 876 part, 903, 971, 972 part, 977 part	1.46
Community Park-2	2nd	Goalbathan_144_01	383 part, 384-389, 1086	5.11
		Goalbathan_144_02	513 part, 514, 515 part, 516 part	
Playground-3	2nd	Sreefaltali_139_00	518-519, 615-616, 617 part, 619 part, 620 part	2.66
Playground-4	2nd	Goalbathan_144_02	699, 705 part, 706, 752 part, 753-756, 996-999	3.35
Utility & Service Facility				
Water Station	2nd	Goalbathan_144_02	610 part, 619 part	0.29
Health Facilities				
Hospital Zone-1	3rd	Goalbathan_144_01	159 part, 164 part, 165 part, 167 part, 171-174, 253-257, 261-269, 272 part, 273, 276 part, 277-283, 284 part, 290, 986-988, 1023-1026, 1045 part	27.76
Community Facilities				
Poura Community Center	1st	Goalbathan_144_02	528 part, 529 part, 530 part, 983	1.92
Eidgha-1	1st	Goalbathan_144_02	940 part, 941-942, 950-952, 960-965, 1087	9.34
Cremation	2nd	Sreefaltali_139_00	696-698	0.43
Graveyard-3	1st	Sreefaltali_139_00	718 part, 719-729, 852-856, 873-875, 876 part	6.23
Ward Center	1st	Goalbathan_144_02	508 part, 509	0.45

Proposal for road development:

A total of 20.69 km road has proposed for road network development of this ward of which some are new and some are widening. Within all roads only 7.50 km road will construct within 1st phase. Recommended road network are shown in the following table.

Table 14.11: Proposed road for ward no-3

Road ID	Width (feet)	Length (m)	Phase	Type
RP01	120	2,197.25	2nd	W
RS03	60	929.39	1st	W
RS08	60	214.54	2nd	N
RS37	40	983.15	1st	W
RS38	40	979.41	1st	W
RS07	40	62.33	1st	W
RS39	40	343.36	1st	W
RL57	30	244.50	1st	W
RL115	30	306.13	1st	W
RL118	30	322.87	1st	N
RL102	30	286.28	1st	W
RL115	30	165.07	1st	N
RL118	30	197.15	1st	W
RL118	30	277.38	1st	N
RA143	20	316.67	1st	W
RA158	20	323.77	1st	W
RA159	20	877.17	1st	W
RA144	20	627.43	1st	W
RA160	20	255.28	1st	W
RS41	40	88.97	2nd	W
RS43	40	796.28	2nd	W
RS20	40	631.52	2nd	W
RS47	40	119.80	2nd	W
RS21	40	55.45	2nd	W
RS44	40	90.67	2nd	W
RS167	40	249.69	2nd	N
RL79	30	721.09	2nd	W
RL113	30	217.76	2nd	W
RL117	30	408.10	2nd	W
RL83	30	278.70	2nd	W
RL114	30	44.49	2nd	W
RL116	30	146.40	2nd	W
RA142	20	241.94	2nd	N
RA142	20	93.36	2nd	W
RS16	40	1,273.68	3rd	N
RS46	40	797.34	3rd	N
RS19	40	406.49	3rd	N
RS32	40	115.58	3rd	W
RS45	40	735.64	3rd	N
RL82	30	1,004.16	3rd	N
RL96	30	420.10	3rd	W
RL97	30	292.89	3rd	W
RL122	30	646.63	3rd	N
RL98	30	330.49	3rd	N
RL80	30	147.04	3rd	W
RL122	30	415.48	3rd	W

Road ID	Width (feet)	Length (m)	Phase	Type
		20,678.87		

**Note: W= widening, N= New Road*

Proposal for drainage development:

A total of 18.85 km drain has proposed for drainage network development of this ward of which almost all are new. Within all roads 7.19 km drain will construct within 1st phase. Recommended drains are shown in the following table.

Table 14.12: Proposed drainage for ward no-3

Drain ID	Type	Length (m)	Phase
DP03	Primary	929.39	1st
DS37	Secondary	983.15	1st
DS38	Secondary	979.41	1st
DS39	Secondary	343.36	1st
DT143	Tertiary	316.67	1st
DT158	Tertiary	323.77	1st
DT159	Tertiary	877.17	1st
DT144	Tertiary	627.43	1st
DT115	Tertiary	306.13	1st
DT118	Tertiary	322.87	1st
DT102	Tertiary	286.28	1st
DT115	Tertiary	165.07	1st
DT118	Tertiary	197.15	1st
DT118	Tertiary	277.38	1st
DT160	Tertiary	255.28	1st
DP01	Primary	2197.25	2nd
DS142	Secondary	241.94	2nd
DS79	Secondary	721.09	2nd
DS113	Secondary	217.76	2nd
DS41	Secondary	88.97	2nd
DS43	Secondary	796.28	2nd
DS20	Secondary	631.52	2nd
DS47	Secondary	119.80	2nd
DS21	Secondary	55.45	2nd
DS08	Secondary	321.82	2nd
DS44	Secondary	90.67	2nd
DS142	Secondary	93.36	2nd
DT117	Tertiary	408.10	2nd
DT83	Tertiary	278.70	2nd
DT116	Tertiary	146.40	2nd
DS122	Secondary	646.63	3rd
DS16	Secondary	1273.68	3rd
DS46	Secondary	797.34	3rd
DS19	Secondary	406.49	3rd
DS45	Secondary	735.64	3rd
DS80	Secondary	147.04	3rd
DS122	Secondary	415.48	3rd
DT96	Tertiary	420.10	3rd
DT97	Tertiary	292.89	3rd
DT32	Tertiary	115.58	3rd
Total		18850.49	

Map 14.5: Landuse Proposal for Ward No. 03

Map 14.6: Proposed Road, Drainage and Utility Services Plan for Ward No. 03

14.3.4 Action Plan for Ward No. 4

Existing Situation:

It consists a vast forest area with a major portion urban fringe area. Ward 02 located at the western side of this Ward, Ward No. 5 at the south of the Ward. Total area of the Ward is 659.33 acres. Among the total area, forest land is 382.85 acres and residential 57.67 acres.

Proposals and Plans for Ward No. 4

Landuse Development*:* For planned development considering the existing landuse and future demand landuse proposal has made. Within the total area 7.49% land proposed for residential use,15.42% industrial, only 0.04 % is commercial use, 56.36 % forest and others are in different categories which are shown in the following table.

Table 14.13: Proposed land use for Ward no-4

Sl. No	Landuse Type	Area Acre	Percentage
1	Urban Residential Zone	49.41	7.49
2	Commercial Zone	0.23	0.04
3	Mixed Use Zone	0.74	0.11
4	General Industrial Zone	101.68	15.42
5	Government Offices	0.00	0.00
6	Education and Research	59.07	8.96
7	Agriculture Zone	0.00	0.00
8	Water Body	2.71	0.41
9	Open Space	22.95	3.48
10	Circulation Network	47.20	7.16
11	Transport & Communication	1.07	0.16
12	Utility Service	0.00	0.00
13	Health Services	0.00	0.00
14	Community Facilities	2.65	0.40
15	Recreational Facilities	0.00	0.00
16	Forest Area	371.59	56.36
17	Restricted	0.00	0.00
Total		659.33	100.00

The facilities considering the demand of the ward were shown in the following table including phasing. The proposed facilities under different category of land uses are also shown in the following table.

Table 14.14: Proposed facilities for ward no-4

Proposed facilities	**Phase No.**	CS Mouza Name	Plot No.	**Area in Acre**
Transportation				
Railway Station	2nd	Uttar Baktarpur_145_00	2 part, 3 part	1.07
Educational Institution				
Technical University	3rd	Uttar Baktarpur_145_00	85, 86 part, 87, 88 part, 96 part, 97-113, 125-131	57.29
Primary School-3	1st	Pachikki_147_00	179 part, 181 part	0.80
Open Spce				
Playground-5	2nd	Pachikki_147_00	84 part, 211 part, 212 part	1.40

Proposed facilities	**Phase No.**	CS Mouza Name	Plot No.	**Area in Acre**
Community Facilities				
Graveyard-4	1st	Pachlakki_147_00	9 part	2.29
Ward Center	1st	Pachlakki_147_00	302 part	0.21

Proposal for road development:

A total of 11.33 km road has proposed for road network development of this ward of which some are new and some are widening. Within all roads only 2.40 km road will construct within 1st phase. Recommended road network are shown in the following table.

Table 14.15: Proposed road for ward no-4

Road ID	Width (feet)	Length (m)	Phase	Type
RS08	60	92.23	1st	W
RS53	40	1,679.93	1st	W
RS39	40	25.61	1st	W
RS54	40	133.42	1st	W
RL127	30	315.68	1st	W
RL127	30	153.12	1st	N
RP01	120	152.44	2nd	W
RS41	40	114.25	2nd	W
RS27	40	173.86	2nd	W
RS33	40	478.32	2nd	W
RS08	40	1,675.05	2nd	N
RS167	40	1,167.17	2nd	N
RL130	30	537.39	2nd	W
RL128	30	565.54	2nd	W
RL92	30	508.69	2nd	W
RL93	30	193.50	2nd	W
RL129	30	75.16	2nd	W
RL103	30	658.50	2nd	W
RL93	30	101.21	2nd	N
RL92	30	388.42	2nd	N
RL99	30	1,072.67	2nd	W
RS29	40	1,070.97	3rd	W
		11,333.13		

**Note: W= widening, N= New Road*

Proposal for drainage development:

A total of 7.08 km drain has proposed for drainage network development of this ward of which almost all are new. Within all roads 2.40 km drain will construct within 1st phase. Recommended drains are shown in the following table.

Table 14.16: Proposed drainage for ward no-4

Drain ID	Type	Length (m)	Phase
DS08	Secondary	92.232	1st
DS39	Secondary	25.605	1st
DT127	Tertiary	315.676	1st
DT53	Tertiary	1679.929	1st
DT54	Tertiary	133.418	1st
DT127	Tertiary	153.124	1st
DP01	Primary	152.439	2nd
DS41	Secondary	114.248	2nd
DS08	Secondary	1748.944	2nd
DT128	Tertiary	565.544	2nd
DT92	Tertiary	508.688	2nd
DT93	Tertiary	193.497	2nd
DT129	Tertiary	75.157	2nd
DT27	Tertiary	173.862	2nd
DT103	Tertiary	658.498	2nd
DT93	Tertiary	101.205	2nd
DT92	Tertiary	388.419	2nd
Total		7080.485	

Map 14.7 : Landuse Proposal for Ward No. 04

Map 14.8: Proposed Road, Drainage and Utility Services Plan for Ward No. 04

14.3.5 Action Plan for Ward No. 5

Existing Situation:

It consists a major portion of builtup area. Ward 04 located at the north side of this Ward, Ward No. 3 at the weast and Ward 06 at the east of the Ward. Total area of the Ward is 529.53 acres. Among the total area, agriculture use is 143.54 acres, forest 128.09 acres, residential 123.42 acres and 17.71 acres are commercial area.

Landuse Development*:* For planned development considering the existing landuse and future demand landuse proposal has made. Within the total area 31.50% land proposed for residential use, 3.62% commercial use, 1.07% mixed use, only 2.02% agricultural and others are in different category which is shown in the following table.

Table 14.17: Proposed land use for Ward no-5

Sl. No	Landuse Type	Area Acre	Percentage
1	Urban Residential Zone	166.82	31.50
2	Commercial Zone	19.19	3.62
3	Mixed Use Zone	5.65	1.07
4	General Industrial Zone	56.50	10.67
5	Government Offices	2.64	0.50
6	Education and Research	70.64	13.34
7	Agriculture Zone	10.67	2.02
8	Water Body	16.27	3.07
9	Open Space	2.20	0.42
10	Circulation Network	50.28	9.50
11	Transport & Communication	1.58	0.30
12	Utility Service	0.52	0.10
13	Health Services	0.00	0.00
14	Community Facilities	1.24	0.23
15	Recreational Facilities	0.00	0.00
16	Forest Area	125.32	23.67
17	Restricted	0.00	0.00
Total		529.53	100.00

The facilities considering the demand of the ward were shown in the following table including phasing. The proposed facilities under different category of land uses are also shown in the following table.

Table 14.18: Proposed facilities for ward no -5

Proposed facilities	Phase	CS Mouza Name	Plot No.	Area in Acre
Commercial Facility				
Wholesale Market-2	3rd	Haritakitala_146_02	218 part, 220 part, 221-224, 225 part	3.38
Transportation				
Tempo Stand-5	2nd	Haritakitala_146_02	218 part, 219, 220 part	0.49
Educational Institution				
University	3rd	Haritakrtala_146_02	116-121, 185-301, 305-317, 322, 326-327, 329 part	53.91
Primary School-4	1st	Haritakrtala_146_02	232, 233, 234 part, 249 part, 250 part,	2.02

Proposed facilities	Phase	CS Mouza Name	Plot No.	Area in Acre
			340 part, 341	
Primary School-5	2nd	Dainkini_149_00	65, 87 part	2.11
Open Space				
Playground-6	2nd	Haritakitala_146_02	244 part, 245-247, 249 part, 337 part, 339	1.91
Community Facilities				
Ward Center	1st	Haritakitala_146_02	158 part, 159 part	0.40

Proposal for road development:

A total of 12.67 km road has proposed for road network development of this ward of which some are new and some are widening. Within all roads only 0.39 km road will construct within 1st phase. Recommanded road network are shown in the following table.

Table 14.19: Proposed road for ward no-5

Road ID	Width (feet)	Length (m)	Phase	Type
RS54	40	388.43	1st	W
RP01	120	1,829.05	2nd	W
RP02	80	270.48	2nd	W
RS41	40	298.36	2nd	W
RS44	40	536.84	2nd	N
RS33	40	798.40	2nd	W
RS42	40	402.90	2nd	W
RS42	40	83.39	2nd	N
RL77	30	1,088.55	2nd	W
RL112	30	1,089.57	2nd	W
RL100	30	638.74	2nd	W
RL99	30	495.80	2nd	W
RA138	20	217.75	2nd	W
RA139	20	205.00	2nd	W
RA140	20	235.06	2nd	W
RA141	20	227.73	2nd	W
RA142	20	48.75	2nd	N
RS16	40	395.42	3rd	N
RS17	40	1,071.73	3rd	W
RS18	40	390.36	3rd	N
RS16	40	436.83	3rd	W
RS18	40	348.29	3rd	W
RL76	30	239.37	3rd	W
RL78	30	187.68	3rd	W
RL80	30	481.52	3rd	N
RL81	30	266.41	3rd	N
RL80	30	2.72	3rd	W
Total		12,675.13		

**Note: W= widening, N= New Road*

Proposal for drainage development:

A total of 10.85 km drain has proposed for drainage network development of this ward of which almost all are new. Within all roads only 0.39 km drain will construct within 1st phase. Recommended drains are shown in the following table.

Table 14.20: Proposed drainage for ward no-5

Drain ID	Type	Length (m)	Phase
DT54	Tertiary	388.432	1st
DP02	Primary	270.477	2nd
DP01	Primary	1829.052	2nd
DS142	Secondary	48.745	2nd
DS77	Secondary	1088.547	2nd
DS112	Secondary	1089.570	2nd
DS41	Secondary	298.360	2nd
DS44	Secondary	536.840	2nd
DS42	Secondary	402.896	2nd
DS42	Secondary	83.392	2nd
DS33	Secondary	291.562	2nd
DT138	Tertiary	217.752	2nd
DT139	Tertiary	205.001	2nd
DT140	Tertiary	235.055	2nd
DT141	Tertiary	227.728	2nd
DS76	Secondary	239.371	3rd
DS80	Secondary	481.520	3rd
DS81	Secondary	266.411	3rd
DS16	Secondary	395.417	3rd
DS17	Secondary	1071.732	3rd
DS18	Secondary	390.357	3rd
DS16	Secondary	436.827	3rd
DS18	Secondary	348.287	3rd
DS80	Secondary	2.716	3rd
Total		10846.047	

Map 14.9: Landuse Proposal for Ward No. 05

Map 14.10: Proposed Road, Drainage and Utility Services Plan for Ward No. 05

14.3.6 Action Plan for Ward No. 6

Existing Situation:

Ward No. 6 is the fringe area and located at central part of the paurashava. Ward 4 located at the west side of this Ward and Ward No. 7 at the southern side of the Ward. Total area of the Ward is 803.47 acres. Among the total area, forest area is 420.68 acres, agriculture use is 156.41 acres and 184 acres is residential area.

Proposals and Plans for Ward No. 6

Landuse Development*:*

For planned development considering the existing landuse and future demand landuse proposal has made. Within the total area 27.84% land proposed for residential use, 51.63% forest and others are in different category.

Table 14.21: Proposed land use for Ward no-6

Sl. No	Landuse Type	Area Acre	Percentage
1	Urban Residential Zone	223.71	27.84
2	Commercial Zone	0.54	0.07
3	Mixed Use Zone	5.83	0.73
4	General Industrial Zone	13.36	1.66
5	Government Offices	0.00	0.00
6	Education and Research	19.06	2.37
7	Agriculture Zone	52.15	6.49
8	Water Body	3.06	0.38
9	Open Space	9.57	1.19
10	Circulation Network	45.40	5.65
11	Transport & Communication	12.24	1.52
12	Utility Service	0.73	0.09
13	Health Services	0.00	0.00
14	Community Facilities	2.97	0.37
15	Recreational Facilities	0.00	0.00
16	Forest Area	414.83	51.63
17	Restricted	0.00	0.00
Total		803.47	100.00

The facilities considering the demand of the ward were shown in the following table including phasing. The proposed facilities under different category of land uses are also shown in the following table.

Table 14.22: Proposed facilities for ward no -6

Proposed facilities	Phase	CS Mouza Name	Plot No.	Area in Acre
Transportation				
Bus Terminal-2	2nd	Baro Kalampur_148_02	443 part, 444 part, 446-449, 454 part	10.36
Tempo Stand-6	2nd	Baro Kalampur_148_02	345 part, 354 part	0.66
Educational Institution				
High School-4	1st	Baro	424 part, 426-427	4.99

Proposed facilities	Phase	CS Mouza Name	Plot No.	Area in Acre
		Kalampur_148_02		
High School-5	2nd	Baro Kalampur_148_02	603 part, 604 part	0.36
Primary School-6	1st	Baro Kalampur_148_02	482 part, 483, 484 part, 485 part	2.19
Primary School-7	2nd	Baro Kalampur_148_02	709 part, 710 part, 723 part, 724 part, 725 part, 726 part	2.15
Madrasa	2nd	Baro Kalampur_148_02	376 part, 377 part, 378 part, 382	6.51
Open Spce				
Playground-7	2nd	Baro Kalampur_148_02	345 part, 355 part, 360 part, 361 part, 362, 363 part	3.40
Playground-8	2nd	Baro Kalampur_148_02	710 part, 711 part, 712 part	0.80
Utility & Service Facility				
Waste Transfer Station-2	2nd	Baro Kalampur_148_02	345 part, 363 part	0.73
Community Facilities				
Graveyard-5	1st	Baro Kalampur_148_02	616 part, 617-619, 627 part, 628, 629 part, 640 part	1.91
Ward Center	1st	Baor Kalampur_148_02	435 part, 506	0.68

Proposal for road development:

A total of 10.49 km road has proposed for road network development of this ward of which some are new and some are widening. Within all roads 4.69 km road will construct within 1st phase. Recommended road network are shown in the following table.

Table 14.23: Proposed road for ward no-6

Road ID	Width (feet)	Length (m)	Phase	Type
RS08	60	2,036.88	1st	W
RS54	40	1,516.03	1st	W
RL91	30	846.06	1st	W
RL91	30	59.50	1st	W
RL91	30	228.81	1st	N
R55	40	1,086.33	2nd	W
RS22	40	1,626.92	2nd	W
RL84	30	249.41	2nd	W
RL130	30	693.86	2nd	W
RL84	30	157.05	2nd	N
RL87	30	80.45	2nd	N
RL90	30	64.51	2nd	N
RA145	20	201.69	2nd	N
RA146	20	197.66	2nd	N
RA146	20	186.61	2nd	W
RS48	40	130.45	3rd	W
RS28	40	732.04	3rd	N
RL69	30	65.28	3rd	W
RL131	30	266.69	3rd	W
RL132	30	61.92	3rd	N

Road ID	Width (feet)	Length (m)	Phase	Type
RL132	30	0.06	3rd	W
Total		10,488.21		

**Note: W= widening, N= New Road*

Proposal for drainage development:

A total of 9.19 km drain has proposed for drainage network development of this ward of which almost all are new. Within all drains 4.21km drain will construct within 1st phase. Recommended drains are shown in the following table.

Table 14.24: Proposed drainage for ward no-6

Drain ID	Type	Length (m)	Phase
DS08	Secondary	2036.876	1st
DT54	Tertiary	1516.030	1st
DT91	Tertiary	228.811	1st
DT91	Tertiary	427.671	1st
DS84	Secondary	249.410	2nd
DS55	Secondary	1086.329	2nd
DS22	Secondary	1626.923	2nd
DS84	Secondary	157.054	2nd
DT145	Tertiary	201.694	2nd
DT146	Tertiary	197.656	2nd
DT87	Tertiary	80.450	2nd
DT90	Tertiary	64.505	2nd
DT146	Tertiary	186.610	2nd
DS69	Secondary	65.279	3rd
DS132	Secondary	61.922	3rd
DS28	Secondary	732.041	3rd
DS132	Secondary	0.059	3rd
DT131	Tertiary	266.687	3rd
Total		9186.007	

Map 14.11: Landuse Proposal for Ward No. 06

Map 14.12: Proposed Road, Drainage and Utility Services Plan for Ward No. 06

14.3.7 Action Plan for Ward No. 7

Existing Situation:

Ward No. 7 is the fringe area and corridor of the Paurashava. Ward 8 located at the east side of this Ward and Ward No. 6 at the northern side of the Ward. Total area of the Ward is 1493.98 acres. Among the total area, forest land is 316.48, agriculture use is 263.03 acres, 482.42 acres are residential area, 158.61 acres are industrial and 34.70 acres are commercial area. This a major built-up area of this Paurashava.

Proposals and Plans for Ward No. 7

Landuse Development*:* For planned development considering the existing landuse and future demand landuse proposal has made. Within the total area 37.28% land proposed for residential use, 2.05% are commercial use, 1.78% mixed use, only 1.71% agricultural and others are in different category which are shown in the following table.

Table 14.25: Proposed land use for Ward no-7

Sl. No	Landuse Type	Area Acre	Percentage
1	Urban Residential Zone	557.01	37.28
2	Commercial Zone	30.61	2.05
3	Mixed Use Zone	26.63	1.78
4	General Industrial Zone	152.70	10.22
5	Government Offices	0.00	0.00
6	Education and Research	63.14	4.23
7	Agriculture Zone	25.55	1.71
8	Water Body	73.39	4.91
9	Open Space	44.91	3.01
10	Circulation Network	107.60	7.20
11	Transport & Communication	4.88	0.33
12	Utility Service	1.01	0.07
13	Health Services	30.00	2.01
14	Community Facilities	8.11	0.54
15	Recreational Facilities	0.00	0.00
16	Forest Area	313.31	20.97
17	Restricted	55.13	3.69
Total		1,493.98	100.00

The facilities considering the demand of the ward were shown in the following table including phasing. The proposed facilities under different category of land uses are also shown in the following table.

Table 14.26: proposed facilities for ward no -7

Proposed facilities	**Phase**	**CS Mouza Name**	Plot No.	**Area in Acre**
Commercial Facility				
Poura Supper Market	2nd	Chandra_154_03	1499 part, 1508 part	0.61
Transportation				
Bus Terminal-2	2nd	Chandra_154_01	87-89	1.17
Tempo/Rickshaw Stand-1	1st	Chandra_154_01	95 part, 96 part, 104 part	1.42
Educational Institution				
Medical College-2	3rd	Chandra_154_04	2650-2659, 2672-2691, 2692 part,	35.92

Proposed facilities	**Phase**	**CS Mouza Name**	Plot No.	**Area in Acre**
			2701-2705, 2720 part	
College-2	2nd	Chandra_154_01	108, 109 part, 110-111, 113-116, 117 part	11.07
High School-5	2nd	Chandra_154_02	520, 521 part, 558 part, 559, 561 part, 562 part, 563-564	5.00
High School-6	2nd	Chandra_154_01	235-236, 238 part, 240 part, 269 part	4.07
		Chandra_154_03	1357-1370, 1384, 1457, 1458 part	
Primary School-8	2nd	Chandra_154_03	1501 part, 1502-1503, 1506, 1508 part, 1631	2.27
Primary School-9	1st	Chandra_154_01	114 part, 183 part, 190 part,	1.93
Open Space				
Central Park	3rd	Chandra_154_01	118 part, 141-142, 143 part, 148 part, 149-155	6.52
Stadium/ Sports Complex	3rd	Chandra_154_01	114 part, 117 part, 118 part, 119-122, 123 part, 156 part	9.44
Utility & Service Facility				
Slaughter House-2	1st	Chandra_154_02	2014 part, 2015 part	0.24
Public Toilet-2	1st	Chandra_154_01	104 part	0.16
Waste Transfer Station-3	2nd	Chandra_154_01	94 part, 104 part	0.28
Health Facilities				
Hospital Zone-2	2nd	Chandra_154_01	104 part, 105-107, 109 part, 190 part, 1 92 part, 193-194	8.18
Hospital Zone-3	3rd	Chandra_154_04	2492-2493, 2494 part, 2671, 2672 part, 2693 part, 2695-2699, 2706-2710, 2711 part	21.18
Community Facilities				
Graveyard-6	2nd	Chandra_154_04	2694 part	4.21
Ward Center	1st	Chandra_154_03	1507 part, 1508 part	0.24

Proposal for road development:

A total of 25.39 km road has proposed for road network development of this ward of which some are new and some are widening. Within all roads 8.40 km road will construct within 1st phase. Recommended road network are shown in the following table.

Table 14.27: Proposed road for ward no-7

Road ID	Width (feet)	Length (m)	Phase	Type
RS04	60	166.31	1st	W
RS08	60	540.00	1st	W
RS09	40	820.43	1st	W
RL101	30	615.35	1st	W
RL107	30	232.30	1st	W
RL61	30	564.06	1st	W
RL63	30	1,053.12	1st	W
RL111	30	800.40	1st	W
RL65	30	732.49	1st	W
RL70	30	1,158.82	1st	W
RL101	30	595.01	1st	N
RA164	20	656.81	1st	W
RA148	20	291.54	1st	W

Road ID	Width (feet)	Length (m)	Phase	Type
RA149	20	171.18	1st	W
RP01	120	3,440.42	2nd	W
RP02	80	1,566.38	2nd	W
RS13	40	115.19	2nd	W
RS14	40	1,222.73	2nd	W
RS55	40	1,288.94	2nd	W
RS56	40	752.31	2nd	W
RS22	40	99.16	2nd	W
RS56	40	238.11	2nd	N
RL109	30	156.49	2nd	N
RL62	30	981.42	2nd	W
RL65	30	459.26	2nd	W
RL110	30	533.35	2nd	W
RL133	30	930.57	2nd	W
RL68	30	171.18	2nd	W
RL87	30	192.82	2nd	W
RL88	30	288.88	2nd	W
RL89	30	355.36	2nd	W
RL90	30	210.42	2nd	W
RL108	30	107.97	2nd	W
RL87	30	59.49	2nd	N
RL90	30	73.01	2nd	N
RS28	40	243.50	3rd	N
RL67	30	212.51	3rd	W
RL69	30	1,331.46	3rd	W
RL71	30	158.95	3rd	W
RL72	30	382.80	3rd	W
RL74	30	324.67	3rd	N
RL75	30	455.14	3rd	W
RL132	30	205.66	3rd	N
RL74	30	259.12	3rd	W
RL132	30	148.69	3rd	W
RA157	20	26.29	3rd	W
Total		25,390.07		

**Note: W= widening, N= New Road*

Proposal for drainage development:

A total of 25.39 km drain has proposed for drainage network development of this ward of which almost all are new. Within all roads 8.40 km drain will construct within 1st phase. Recommended drains are shown in the following table.

Table 14.28: Proposed drainage for ward no-7

Drain ID	Type	Length (m)	Phase
DP04	Primary	166.313	1st
DS101	Secondary	615.349	1st
DS107	Secondary	232.301	1st
DS61	Secondary	564.059	1st
DS08	Secondary	540.004	1st
DS09	Secondary	820.429	1st
DS101	Secondary	595.012	1st
DT164	Tertiary	656.809	1st
DT148	Tertiary	291.541	1st
DT149	Tertiary	171.175	1st
DT63	Tertiary	1053.124	1st
DT111	Tertiary	800.404	1st
DT65	Tertiary	732.486	1st
DT70	Tertiary	1158.817	1st
DP02	Primary	1566.379	2nd
DP01	Primary	3440.416	2nd
DS109	Secondary	156.488	2nd
DS62	Secondary	981.419	2nd
DS13	Secondary	115.193	2nd
DS14	Secondary	1222.727	2nd
DS55	Secondary	1288.941	2nd
DS56	Secondary	752.314	2nd
DS22	Secondary	99.155	2nd
DS56	Secondary	238.108	2nd
DS108	Secondary	107.966	2nd
DT65	Tertiary	459.262	2nd
DT110	Tertiary	533.352	2nd
DT133	Tertiary	930.574	2nd
DT68	Tertiary	171.177	2nd
DT87	Tertiary	192.824	2nd
DT88	Tertiary	288.880	2nd
DT89	Tertiary	355.362	2nd
DT90	Tertiary	210.418	2nd
DT87	Tertiary	59.487	2nd
DT90	Tertiary	73.005	2nd
DS67	Secondary	212.513	3rd
DS69	Secondary	1331.458	3rd
DS132	Secondary	205.662	3rd
DS28	Secondary	243.499	3rd
DS132	Secondary	148.686	3rd
DT71	Tertiary	158.948	3rd
DT72	Tertiary	382.799	3rd
DT74	Tertiary	324.671	3rd
DT75	Tertiary	455.136	3rd
DT74	Tertiary	259.124	3rd
DT157	Tertiary	26.292	3rd
Total		25390.058	

Map 14.13: Landuse Proposal for Ward No. 07

Map 14.14: Proposed Road, Drainage and Utility Services Plan for Ward No. 07

14.3.8 Action Plan for Ward No. 8

Existing Situation:

Ward No.8 is the built-up area of the Paurashava consisting a major portion of agricultural area. Ward 7 is located at the western part of this ward and ward 9 located in at the south-east side of the ward. Total area of the Ward is 412.18 acres. Among the total area, agriculture use is 124.49 acres, 16.79 acres are residential area and 11.79 acres are commercial area.

Proposals and Plans for Ward No. 8

Landuse Development*:* For planned development considering the existing landuse and future demand landuse proposal has made. Within the total area only 45.39% land proposed for residential use, 2.87% are commercial use, 1.21% mixed use, 13.92% agricultural and others are in different category which are shown in the following table.

Table 14.29: Proposed land use for Ward no-8

Sl. No	Landuse Type	Area Acre	Percentage
1	Urban Residential Zone	187.07	45.39
2	Commercial Zone	11.82	2.87
3	Mixed Use Zone	4.98	1.21
4	General Industrial Zone	57.36	13.92
5	Government Offices	0.00	0.00
6	Education and Research	11.26	2.73
7	Agriculture Zone	56.71	13.76
8	Water Body	23.19	5.63
9	Open Space	12.91	3.13
10	Circulation Network	38.55	9.35
11	Transport & Communication	1.59	0.39
12	Utility Service	0.00	0.00
13	Health Services	0.00	0.00
14	Community Facilities	4.56	1.11
15	Recreational Facilities	2.18	0.53
16	Forest Area	0.00	0.00
17	Restricted	0.00	0.00
Total		412.18	100.00

The facilities considering the demand of the ward were shown in the following table including phasing. The proposed facilities under different category of land uses are also shown in the following table.

Table 14.30: Proposed facilities for ward no -8

Proposed facilities	**Phase**	CS Mouza Name	Plot No.	**Area in Acre**
Commercial Facility				
Katcha Bazar-3	1st	Purbo Chandra_162_00	207 part, 211 part, 247 part, 248 part, 250 part	1.23
Transportation				
Tempo/Rickshaw Stand-1	1st	Purbo Chandra_162_00	16 part	1.59
Educational Institution				

Proposed facilities	**Phase**	CS Mouza Name	Plot No.	**Area in Acre**
High School-7	2nd	Purba Chandra_162_00	25 part, 26, 34, 36 part	4.73
High School-8	2nd	Purba Chandra_162_00	251 part, 252	3.27
Open Spce				
Playground-9	2nd	Purbo Chandra_162_00	251 part	2.25
Recreational Facilities				
Theater-2	2nd	Purbo Chandra_162_00	196 part, 207 part, 208 part, 210 part	2.18
Community Facilities				
Graveyard-7	1st	Purbo Chandra_162_00	237 part, 251 part	2.00
Graveyard-8	1st	Purbo Chandra_162_00	281 part	1.26
Ward Center	1st	Purabo Chandra_162_00	207 part	0.67

Proposal for road development:

A total of 8.93 km road has proposed for road network development of this ward of which some are new and some are widening. All of the roads 1.99 km has proposed for development within 1st phase. Recommended road network are shown in the following table.

Table 14.31: Proposed road for ward no-8

Road ID	Width (feet)	Length (m)	Phase	Type
RS04	60	1,715.48	1st	W
RS08	60	272.93	1st	W
RS13	40	682.45	2nd	W
RS14	40	118.32	2nd	W
RL66	30	400.67	2nd	W
RL68	30	476.22	2nd	W
RL134	30	613.34	2nd	W
RA166	20	542.31	2nd	W
RA155	20	276.87	2nd	W
RS11	40	1,113.98	3rd	N
RS12	40	438.82	3rd	N
RS10	40	147.52	3rd	N
RS12	40	135.20	3rd	W
RL67	30	293.37	3rd	W
RL73	30	643.41	3rd	W
RA157	20	327.75	3rd	N
RA165	20	422.25	3rd	W
RA157	20	314.04	3rd	W
Total		8,934.93		

**Note: W= widening, N= New Road*

Proposal for drainage development:

A total of 8.93 km drain has proposed for drainage network development in this ward of which almost all are new. Within all roads 1.99 km drain will construct within 1st phase. Recommended drains are shown in the following table.

Table 14.32: Proposed drainage for ward no-8

Drain ID	Type	Length (m)	Phase
DP04	Primary	1715.481	1st
DS08	Secondary	272.932	1st
DS13	Secondary	682.447	2nd
DS14	Secondary	118.324	2nd
DT166	Tertiary	542.310	2nd
DT66	Tertiary	400.665	2nd
DT68	Tertiary	476.221	2nd
DT134	Tertiary	613.336	2nd
DT155	Tertiary	276.872	2nd
DS67	Secondary	293.372	3rd
DS11	Secondary	1113.976	3rd
DS12	Secondary	438.816	3rd
DS12	Secondary	135.202	3rd
DT157	Tertiary	327.745	3rd
DT73	Tertiary	643.413	3rd
DT10	Tertiary	147.518	3rd
DT165	Tertiary	422.245	3rd
DT157	Tertiary	314.041	3rd
Total		8934.916	

Map 14.15: Landuse Proposal for Ward No. 08

Map 14.16: Proposed Road, Drainage and Utility Services Plan for Ward No. 08

14.3.9 Action Plan for Ward No. 9

Existing Situation:

Ward No.9 is the built-up area of the Paurashava. Shaphipur Ansar Academy is located within this area.There is a huge agglomeration of industries in this area and located at the south-east side of the paurashava. Total area of the Ward is 652.77 acres. Among the total area, agriculture use is 231.33 acres, 164.54 acres are residential area, 117.50 acres are industrial and 18.69 acres are commercial area

Proposals and Plans for Ward No. 9

Landuse Development*:*

For planned development considering the existing landuse and future demand landuse proposal has made. Within the total area 36.92% land proposed for residential use, 1.66% commercial, only 2.84% agricultural and others are in different categories which are shown in the following table.

Table 14.33: Proposed land use for Ward no-9

Sl. No	Landuse Type	Area Acre	Percentage
1	Urban Residential Zone	240.99	36.92
2	Commercial Zone	10.82	1.66
3	Mixed Use Zone	14.79	2.27
4	General Industrial Zone	114.16	17.49
5	Government Offices	0.96	0.15
6	Education and Research	64.23	9.84
7	Agriculture Zone	18.52	2.84
8	Water Body	33.10	5.07
9	Open Space	39.69	6.08
10	Circulation Network	45.81	7.02
11	Transport & Communication	0.26	0.04
12	Utility Service	4.03	0.62
13	Health Services	0.10	0.02
14	Community Facilities	14.31	2.19
15	Recreational Facilities	0.99	0.15
16	Forest Area	0.00	0.00
17	Restricted	50.02	7.66
Total		652.77	100.00

The facilities considering the demand of the ward were shown in the following table including phasing. The proposed facilities under different category of land uses are also shown in the following table.

Table 14.34: Proposed facilities for ward no -9

Proposed facilities	Phase	CS Mouza Name	Plot No.	Area in Acre
Residential				
Low Income Housing Area	2nd	Safipur_161_01	16 part, 18-20, 22-32, 33 part, 35 part, 36-37, 38 part, 124, 126-143, 150-152	33.81
Commercial Facility				
Super Market-2	2nd	Safipur_161_02	845-847, 849 part	0.48

Proposed facilities	Phase	CS Mouza Name	Plot No.	Area in Acre
Transportation				
Tempo Stand-7	1st	Safipur_161_01	295 part	0.14
Baby Taxi/Rickshaw Stand	1st	Safipur_161_01	295 part	0.12
Educational Institution				
Vocational Training Center	2nd	Safipur_161_02	874 part, 875-876, 935-953, 966 part, 967-975, 976 part, 986 part	42.56
High School-9	2nd	Safipur_161_01	9 part, 10 part, 47,, 48, 49 part, 50, 51 part, 52 part, 56 part	5.36
Primary School-10	2nd	Safipur_161_02	751-753 part, 756-758, 760-762 part	2.10
Open Spce				
Community Park-3	1st	Safipur_161_02	816 part, 819 part, 841, 856 part, 858-859	2.56
Playground-10	2nd	Safipur_161_01	11 part, 12 part, 14 part, 15, 49 part	5.38
Utility & Service Facility				
Dumping Site-2	2nd	Safipur_161_01	16 part, 17, 21 part	3.91
Recreational Facilities				
Theater-3	2nd	Safipur_161_01	357-358	0.99
Community Facilities				
Eidgha-2	1st	Safipur_161_02	923 part, 924 part, 931, 934 part	5.00
Graveyard-9	1st	Safipur_161_02	1027 part, 1028-1034, 1036	7.36
Ward Center	1st	Safipur_161_01	323 part	0.60

Proposal for road development:

A total of 10.83 km road has proposed for road network development of this ward of which some are new and some are widening. Within all roads 6.48 km road will construct at 1st phase. Recommended road network are shown in the following table.

Table 14.35: Proposed road for ward no-9

Road ID	Width (feet)	Length (m)	Phase	Type
R04	60	618.04	1st	W
R34	40	1,232.66	1st	W
R35	40	278.59	1st	W
R58	30	575.01	1st	W
R59	30	622.43	1st	W
R106	30	561.19	1st	W
R60	30	787.26	1st	W
R135	30	77.95	1st	W
R58	30	117.92	1st	N
R105	30	546.67	1st	W
R136	20	724.37	1st	W
R137	20	335.64	1st	W
R01	120	1,358.68	2nd	W
R104	30	361.80	2nd	N
R10	40	1,148.53	3rd	W
R40	40	921.01	3rd	W
R11	40	146.04	3rd	N
R12	40	371.03	3rd	N
R157	20	26.61	3rd	N
R156	20	22.20	3rd	N
Total		10,833.63		

**Note: W= widening, N= New Road*

Proposal for drainage development:

A total of 10.76 km drain has proposed for drainage network development of this ward of which almost all are new. Within all drains 6.40 km drain will construct within 1st phase. Recommended drains are shown in the following table.

Table 14.36: Proposed drainage for ward no-9

Drain ID	Type	Length (m)	Phase
DP04	Primary	618.038	1st
DS58	Secondary	575.006	1st
DS59	Secondary	622.433	1st
DS106	Secondary	561.192	1st
DS60	Secondary	787.259	1st
DS34	Secondary	1232.659	1st
DS35	Secondary	278.590	1st
DS58	Secondary	117.922	1st
DS105	Secondary	546.666	1st
DT136	Tertiary	724.368	1st
DT137	Tertiary	335.635	1st
DP01	Primary	1358.680	2nd
DS104	Secondary	361.800	2nd
DS10	Secondary	1148.534	3rd
DS40	Secondary	921.010	3rd
DS11	Secondary	146.037	3rd
DS12	Secondary	371.031	3rd
DT157	Tertiary	26.612	3rd
DT156	Tertiary	22.202	3rd
Total		10755.674	

Map 14.17: Landuse Proposal for Ward No. 09

Map 14.18: Proposed Road, Drainage and Utility Services Plan for Ward No. 09

14.4 Implementation Guidelines

Implementation of the Ward Action Plan should follow the development control procedures for determining planning applications by use of the simple and standard planning application procedures. A simple application will be assessed quickly against a given set of criteria, essentially consisting of the following:

- The proposed development confirms all respects mentioned in the policies of the Structure Plan and Urban Area Plan.
- The usage identified in the application is being considered appropriate for inclusion in an area demarcated in the Ward Action Plan. An indicative list of uses considered appropriate is below:
- buildings are a maximum of four-storied;
- no single building or related group of buildings is 1000 sq. m. of gross floor area; and
- access and utility corridors are not impinged.

Provided that the planning application meets above criteria and the application will be approved and planning permission is given.

Planning applications that do not meet the above criteria or are considered marginal cases (to be known as an invalid simple application) will be subjected to a more detailed examination in considering standard procedure.

Following development and landuses are indicative of those appropriate in the Ward Action Plan:

- Residential development up to four-storied.
- Small-scale shops.
- Primary schools/kindergartens.
- Mosques (or other religious facilities) servicing a local area plus small graveyard if required.
- Recreational development.
- Local health facilities (clinics rather than hospital).
- Small-scale office (may be public or private) development.
- Workshops (small-scale workshops with operations only) in daylight hours and low traffic generators.
- Open space (playgrounds, parks, etc.)
- Access roads.
- Utilities; and
- Drainage channels.

When considering a standard planning application within areas zoned for Ward Action Plan, the Paurashava will need to undertake a two-stage process. First, before considering site specific issues, the Paurashava will need, on receipt of the planning application, to consider the wider context and determine issues relating to the overall area into which the application falls. The Paurashava will need to:

- Determine the boundaries of the wider area. These will usually be formed by some distinctive natural or man-made feature, for example a khal, river or road which provides access into the area. Such areas will vary in shape and size.
- Identify the existing landuses within these boundaries. In Ward Action Plan, the predominant use will be residential but other uses will present in the vicinity of the application.
- Identify and assess the existing access and circulation arrangements of the area. Preferably, the area should be served by 10 meter access roads which run through the entire area providing access to all Wards. These access roads should be linked to local roads. If this is not the case and access roads of sufficient width, are not available, the Paurashava shall consider whether or not further development is appropriate. New development may result in increased vehicular congestion and increased demand for utility services, where this could be difficult to supply.

In these instances, the Paurashava will consider refusal of application or at least a delay until access and utility provision can be made. This may require acquisition of land.

- Identify the need for community facilities (schools, clinics, religious facilities, open spaces, etc.) or plots for utility services. Do sufficient already exist or should more land be sought for increased provision to the existing population? In this latter instance, the Paurashava will again need to consider acquisition of land including the land, either in part or in full, under consideration for development.
- Consider areas of high landscape quality in the locality which should be preserved and the potential impact of the proposed development on those areas.

If there is doubt in the mind of the Paurashava as to the answers to the above questions, the planning application will require a more detailed assessment.

Secondly, the Paurashava will need to consider issues relating to the individual site and application. These can only be determined once the overall context of the area has been established. The questions the Paurashava will need to ask are:

- Can be proposed use of land be considered a “good neighbour”, defined in this situation as a use which can be carried out in any residential area without detriment to the amenities of the area by reason of noise, vibration, smell, fumes, smoke, soot, ash, dust or grit?
- Is the use likely to generate excessive volumes of traffic which either cannot be accommodated on the existing road system or which are likely to disturb, its neighbours?

- Will the working hours of the use (if non-residential) cause a disturbance to residential neighbours (with working late in to the evening or night or 24-hours operations likely to cause a nuisance and therefore not being permitted)?
- If yes to any of the above, the application should be rejected and directed to a more suitable location.
- Is the use in conformity with the surrounding uses or with those that are compatible with a site in a predominantly residential area?
- Does the proposed boundary of the application impinge upon a road corridor, utility reserve or drainage channel reserve? If it does, it should be relocated outside such a reserve, even if this constitutes a reduction in the overall size of the plot. If excessive land will be lost as a result, implying that the development can no longer proceed, the application will need to be rejected.
- Does the application provide for adequate site access from, preferably as minimum, a 6 meter access road? Does it have sufficient on-site or off-site parking facilities to cater for the potential demand? If it does not, the plans should be amended or the application refused.
- Will the development destroy landscape unique to the location? If it does, its design will need to be altered to protect the landscape, or the application will need to be refused.
- Is the scale of development proposed in keeping with its neighbours? If too large, it should be reduced. Does it impinge up on the privacy of others? If it does, the design / layout / size should be changed. If it can not be appropriately modified, it should be refused.
- Will the proposed development negatively impact upon utility provision in the area i.e. will it overload the system for some reason (like high electricity demand or high water consumption)? Will pollution from the proposed activities cause a problem in the neighbourhood? If this is likely to occur, the application should be refused.

If the application is for a major development, have the utility authorities being contacted to give their assessment and approval for the infrastructure works that will be required?

Given the existing situation in some of the Ward Action Plan, where for example, access is already poor or there is insufficient space available to provide adequate infrastructure, the Paurashava will aim to ensure that its decision will not make the situation worse.

The Paurashava will need to process each application within one month, at the end of which time they will either need to:

- approve the application unconditionally;
- approve the application subject to a number of conditions; or
- refuse the application.

14.5 Concluding Remarks

The Master Plan is prepared for managing and promoting development over medium terms following the broad guidelines set by the longer term Structure Plan. It shows the structure of sub-system in space over the medium term and identifies broad programs of direct action especially related to infrastructural development, institutional issues as well as broad financing strategies. The plan also outlines more specific Ward-wise development policies to guide development over the medium terms. One major objective of preparing Master Plan is the consolidation of development activities by various agencies in areas that have strongest potential for growth in the medium term and can accommodate anticipated volume of growth. Other purpose of preparing Master Plan is to facilitate the development control function. It shows the broad landuse zones on a more detailed scale of maps as derived from Structure Plan. The plan provides details of landuse zoning and building controls, the development control function becomes easier to implement with a Master Plan. It also shows land reservations required for essential uses and major infrastructure development.

ANNEXURE-A
Paurashava Gazette

ANNEXURE-B
Permitted Landuse

Urban Residential Landuse

Landuse Permitted

The following uses in the tables are proposed to be applicable for this zone only.

Table No. A.1: Landuse Permitted

Permitted
Artisan's Shop
Assisted Living or Elderly Home
Confectionery Shop
Barber Shop
Child Daycare \ Preschool
Cleaning \ Laundry Shop
Communication Service Facilities
Communication Tower Within Permitted Height
Condominium or Apartment
Cottage
Cyber Café
Daycare Center (Commercial or Nonprofit)
Drug Store or Pharmacy
Employee Housing (Guards \ Drivers) \ Ancillary Use
General Store
Grocery Store
High School
Household Appliance and Furniture Repair Service (No Outside Storage)
Housing For Seasonal Firm Labor
Landscape and Horticultural Services
Mosque, Place Of Worship
Newspaper Stand
Nursery School
Orphanage
Eidgah
Photocopying and Duplicating Services (No Outside Storage)
Pipelines and Utility Lines
Playing Field
Primary School
Private Garages (Ancillary Use)
Project Identification Signs
Property Management Signs
Public Transport Facility
Satellite Dish Antenna
Shelter (Passers By)
Shoe Repair or Shoeshine Shop (Small)
CBO Office

Permitted
Special Dwelling
Temporary Tent
Temporary Pandle for Permitted Function
Newspaper Stand
Specialized School: Dance, Art, Music, Physically Challenged & Others
Transmission Lines
Urban-Nature Reserve
Utility Lines
Woodlot
Children's Park (Must Have Parking)
ATM Booth
Water Pump \ Reservoir
Monument (Neighborhood Scale)
Bill Payment Booth
Boarding and Rooming House
Dormitory
Memorial Structure (Ancillary)
Neighborhood Center* *(Where Neighborhood Center exists)*
Permitted
Community Center
Doctor \ Dentist Chamber
Cultural Exhibits and Libraries
Fast Food Establishment \ Food Kiosk
Flowers, Nursery Stock and Florist Supplies
Fitness Centre
Gaming Clubs
Departmental Stores
Retail Shops \ Facilities

**Permission of Neighborhood Center Facilities in absence of formal neighborhood should be subject to Landuse Permit CommitteeSource: Compiled by the Consultants*

Landuse Conditionally Permitted

The following uses may be permitted or disallowed in this zone after review and approval by the authority/committee following appropriate procedure while the application meets the criteria mentioned in the requirement.

Table No. A.2: Landuse Conditionally Permitted

Conditional
Addiction Treatment Center
Amusement and Recreation (Indoors)
Funeral Services
Art Gallery, Art Studio \ Workshop
Automobile Driving Academy
Beauty and Body Service
Billiard Parlor \ Pool Hall
Book or Stationery Store or Newsstand
Building Maintenance \ Cleaning Services, No Outside Storage

Conditional
Bus Passenger Shelter
Graveyard \ Cemetery
Coffee Shop \ Tea Stall
Correctional Institution
Courier Service
Crematorium
Plantation (Except Narcotic Plant)
Furniture & Variety Stores
Emergency Shelter
Energy Installation
Garages
Garden Center or Retail Nursery
Fire Brigade Station
Police Station
Temporary Rescue Shed
Guest House
Slaughter House
Static Transformer Stations
Tourist Home or Resort
Market (Bazar)
Optical Goods Sales
Outdoor Café
Outdoor Fruit and Vegetable Markets
Community Hall
Neighborhood Co-Operative Office
Overhead Water Storage Tanks
Row House
Paints and Varnishes Store
Parking Lot
Patio Homes
Photofinishing Laboratory
Post Office
Postal Facilities
Sports and Recreation Club
Tennis Club
Flood Management Structure
Telephone Sub Station
Electrical Sub Station

Source: Compiled by the Consultants

Restricted Uses

All uses except permitted and conditionally permitted uses are restricted in this zone.

General Industrial Zone

Landuse Permitted

The following uses in the tables are proposed to be applicable for this zone only.

Table No. A.3: Landuse Permitted

Permitted
Confectionery Shop
Bank & Financial Institution
Bicycle Assembly, Parts and Accessories
Blacksmith
Bus Passenger Shelter
Communication Tower Within Permitted Height
Freight Transport Facility
Police Box \ Barrack
Fire \ Rescue Station
Grocery Store
Household Appliance and Furniture Repair Service
Machine Sheds
Meat and Poultry (Packing & Processing)
Mosque, Place Of Worship
Newspaper Stand
Photocopying and Duplicating Services
Pipelines and Utility Lines
Printing, Publishing and Distributing
Public Transport Facility
Restaurant
Retail Shops \ Facilities
Salvage Processing
Salvage Yards
Satellite Dish Antenna
Sawmill, Chipping and Pallet Mill
Shelter (Passers By)
Television, Radio or Electronics Repair (No Outside Storage)
Transmission Lines
Truck Stop & Washing or Freight Terminal
Utility Lines
Wood Products
Woodlot
ATM Booth
Water Pump \ Reservoir
Effluent Treatment Plant
Social Forestry

Source: Compiled by the Consultants

Landuse Conditionally Permitted

The following uses may be permitted or denied in this zone after review and approval by the authority/committee following appropriate procedure.

Table No. A.4: Landuse Conditionally Permitted

Conditional
Amusement and Recreation (Indoors)
Appliance Store
Plantation (Except Narcotic Plant)

Conditional
Cyber Café
Daycare Center (Commercial or Nonprofit)
Doctor \ Dentist Chamber
Electrical and Electronic Equipment and Instruments Sales
Employee Housing
Energy Installation
Fast Food Establishment \ Food Kiosk
Garages
Grain & Feed Mills
Incineration Facility
Super Store
Lithographic or Print Shop
Motor Vehicle Fuelling Station \ Gas Station
Motorcycle Sales Outlet
Outdoor Fruit and Vegetable Markets
Outside Bulk Storage
Overhead Water Storage Tanks
Painting and Wallpaper Sales
Paints and Varnishes
Parking Lot
Parking Lot (Commercial)
Private Garages
Retail Shops Ancillary To Studio \ Workshop
Jute Mill

Source: Compiled by the Consultants

Restricted Uses

All uses except permitted and conditionally permitted uses.

Commercial Zone (Business)

Landuse Permitted

Commercial office zone is mainly intended for supporting the official works. There are several functions that are permitted in this zone.

Table No. A.5: Landuse Permitted

Permitted
Accounting, Auditing or Bookkeeping Services
Billboards, Advertisements & Advertising Structure
Agri-Business
Agricultural Sales and Services
Ambulance Service
Antique Shop
Appliance Store
Auction Market
Auditorium, Coliseum, Meeting Halls, and Conference Facilities, Convention
Auto Leasing or Rental Office

Permitted
Auto Paint Shop
Auto Parts and Accessory Sales (Indoors)
Auto Repair Shop (With Garage)
Automobile Wash
Automobile Sales
Confectionery Shop
Bakery or Confectionery Retail
Bank & Financial Institution
Bar (Licensed)
Barber Shop
Beauty and Body Service
Bicycle Shop
Billiard Parlor \ Pool Hall
Book or Stationery Store or Newsstand
Building Material Sales or Storage (Indoors)
Bulk Mail and Packaging
Bus Passenger Shelter
Cinema Hall
Communication Service Facilities
Communication Tower Within Permitted Height
Computer Maintenance and Repair
Computer Sales & Services
Conference Center
Construction Company
Courier Service
Cyber Café
Daycare Center (Commercial or Nonprofit)
Department Stores, Furniture & Variety Stores
Doctor \ Dentist Chamber
Drug Store or Pharmacy
Electrical and Electronic Equipment and Instruments Sales
Fast Food Establishment \ Food Kiosk
Freight Handling, Storage & Distribution
Freight Transport Facility
Freight Yard
General Store
Grocery Store
Guest House
Hotel or Motel
Inter-City Bus Terminal
Jewelry and Silverware Sales
Junk \ Salvage Yard
Super Store
Market (Bazar)
Mosque, Place Of Worship
Motorcycle Sales Outlet
Multi-Storey Car Park

Permitted
Newspaper Stand
Outdoor Fruit and Vegetable Markets
Outdoor Recreation, Commercial
Parking Lot (Commercial)
Pet Store
Photocopying and Duplicating Services
Photofinishing Laboratory & Studio
Pipelines and Utility Lines
Post Office
Preserved Fruits and Vegetables Facility \ Cold Storage
Printing, Publishing and Distributing
Project Identification Signs
Property Management Signs
Public Transport Facility
Refrigerator or Large Appliance Repair
Resort
Restaurant
Retail Shops \ Facilities
Salvage Processing
Salvage Yards
Satellite Dish Antenna
Sawmill, Chipping and Pallet Mill
Shelter (Passers By)
Shopping Mall \ Plaza
Slaughter House
Software Development
Sporting Goods and Toys Sales
Taxi Stand
Telephone Exchanges
Television, Radio or Electronics Repair (No Outside Storage)
Theater (Indoor)
Transmission Lines
Utility Lines
Vehicle Sales & Service, Leasing or Rental
Veterinarian Clinics, Animal Hospitals, Kennels and Boarding Facilities
Warehousing
Wood Products
Woodlot
ATM Booth
Water Pump \ Reservoir
Agro-Based Industry (Rice Mill, Saw Mill, Cold Storage)
Social Forestry

Source: Compiled by the Consultants

Landuse Conditionally Permitted

Some functions are permitted with some condition in this zone.

Table No. A.6: Landuse Conditionally Permitted

Conditional
Amusement and Recreation (Indoors)
Bicycle Assembly, Parts and Accessories
Broadcast Studio \ Recording Studio (No Audience)
Coffee Shop \ Tea Stall
Concert Hall, Stage Shows
Construction, Survey, Soil Testing Firms
Trade Shows
Craft Workshop
Plantation (Except Narcotic Plant)
Energy Installation
Firm Equipment Sales & Service
Agricultural Chemicals, Pesticides or Fertilizers Shop
Fitness Centre
Flowers, Nursery Stock and Florist Supplies
Forest Products Sales
Fuel and Ice Dealers
Garages
Garden Center or Retail Nursery
Police Box \ Barrack
Fire \ Rescue Station
Grain & Feed Mills
Household Appliance and Furniture Repair Service
Incineration Facility
Indoor Amusement Centers, Game Arcades
Indoor Theatre
Lithographic or Print Shop
Motor Vehicle Fuelling Station \ Gas Station
Musical Instrument Sales or Repair
Optical Goods Sales
Painting and Wallpaper Sales
Paints and Varnishes
Parking Lot
Patio Homes
Postal Facilities
Poultry
Private Garages
Professional Office
Retail Shops Ancillary To Studio \ Workshop
Stone \ Cut Stone Products Sales

Restricted Uses

All uses except permitted and conditionally permitted uses.

Rural Settlement Zone

Landuse Permitted

The following uses in the tables are proposed to be applicable for this zone only.

Table No. A.7: Landuse Permitted

Permitted
Agricultural Dwellings
Animal Husbandry
Animal Shelter
Graveyard \ Cemetery
Child Daycare \ Preschool
Primary School
Communication Tower Within Permitted Height
Cottage
Crematorium
Dairy Firming
General Store
Grocery Store
Handloom (Cottage Industry)
Housing For Seasonal Firm Labor
Mosque, Place Of Worship
Newspaper Stand
Nursery School
orphanage
Outdoor Religious Events (Eidgah)
Playing Field
Satellite Dish Antenna
NGO \ CBO Facilities
Special Dwelling (E.G. Dorm For Physically Challenged Etc.)
Temporary Shed \ Tent
Specialized School: Dance, Art, Music, Physically Challenged & Others
Static Electrical Sub Stations
Transmission Lines
Utility Lines
Woodlot
Plantation (Except Narcotic Plant)
Social Forestry
Memorial Structure

Source: Compiled by the Consultants

Landuse Conditionally Permitted

The following uses may be permitted or disallowed in this zone after review and approval by the authority/committee following appropriate procedure while the application meets the criteria mentioned in the requirement.

Table No. A.8: Landuse Conditionally Permitted

Conditional
Artisan's Shop (Potter, Blacksmith, and Goldsmith Etc.)

Conditional
Research organization (Agriculture \ Fisheries)
Energy Installation
Fish Hatchery
Garden Center or Retail Nursery
Emergency Shelter
Sports and Recreation Club, Firing Range: Indoor

Source: Compiled by the Consultants

Restricted Uses

All uses except permitted and conditionally permitted uses are restricted in this zone.

Mixed use zone

Landuse Permitted

The following uses in the tables are proposed to be applicable for this zone only.

Table No. A.11: Landuse Permitted

Permitted
Accounting, Auditing or Bookkeeping Services
Addiction Treatment Center
Billboards, Advertisements & Advertising Structure
Agricultural Sales and Services
Antique Store
Appliance Store
Art Gallery, Art Studio \ Workshop
Artisan's Shop
Assisted Living or Elderly Home
Auditorium, Coliseum, Meeting Halls, and Conference Facilities, Convention
Auto Leasing or Rental Office
Automobile Wash
Automobile Driving Academy
Confectionery Shop
Bakery or Confectionery Retail
Bank & Financial Institution
Barber Shop
Bicycle Shop
Billiard Parlor \ Pool Hall
Blacksmith
Boarding and Rooming House
Book or Stationery Store or Newsstand
Bus Passenger Shelter
Child Daycare \ Preschool
Cleaning \ Laundry Shop
Commercial Recreational Buildings
Communication Service Facilities
Communication Tower Within Permitted Height
Community Center

Permitted
Condominium or Apartment
Correctional Institution
Courier Service
Cyber Café
Daycare Center (Commercial or Nonprofit)
Doctor \ Dentist Chamber
Employee Housing
Fabric Store
Fast Food Establishment \ Food Kiosk
Funeral Services
General Store
Grocery Store
Guest House
Hospital
Jewelry and Silverware Sales
Landscape and Horticultural Services
Mosque, Place Of Worship
Newspaper Stand
Nursery School
Photocopying and Duplicating Services
Pipelines and Utility Lines
Primary School
Project Identification Signs
Property Management Signs
Public Transport Facility
Resort
Satellite Dish Antenna
Shelter (Passers By)
Shoe Repair or Shoeshine Shop (Small)
Slaughter House
Social organization
Software Development
Special Dwelling
Toys and Hobby Goods Processing and Supplies
Training Centre
Transmission Lines
Utility Lines
Vehicle Sales & Service, Leasing or Rental
Warehousing
Woodlot
Children's Park
ATM Booth
Water Pump \ Reservoir
Social Forestry
Dormitory
Rickshaw \ Auto Rickshaw Stand

Source: Compiled by the Consultants

Landuse Conditionally Permitted

The following uses may be permitted or disallowed in this zone after review and approval by the authority/committee.

Table No. A.12: Landuse Conditionally Permitted

Conditional
Agricultural Chemicals, Pesticides or Fertilizers Shop
Amusement and Recreation (Indoors)
Beauty and Body Service
Broadcast Studio \ Recording Studio (No Audience)
Building Maintenance \ Cleaning Services, No Outside Storage
Building Material Sales or Storage (Indoors)
Graveyard \ Cemetery
Coffee Shop \ Tea Stall
Computer Maintenance and Repair
Computer Sales & Services
Concert Hall, Stage Shows
Conference Center
Construction Company
Construction, Survey, Soil Testing Firms
Cottage
Counseling Services
Craft Workshop
Crematorium
Plantation (Except Narcotic Plant)
Cultural Exhibits and Libraries
Department Stores, Furniture & Variety Stores
Drug Store or Pharmacy
Energy Installation
Fitness Centre
Flowers, Nursery Stock and Florist Supplies
Freight Handling, Storage & Distribution
Freight Transport Facility
Gaming Clubs
Garages
Garden Center or Retail Nursery
Commercial Office
Project Office
Government Office
Hotel or Motel
Household Appliance and Furniture Repair Service
Indoor Amusement Centers, Game Arcades
Indoor Theatre
Lithographic or Print Shop
Market (Bazar)
Health Office, Dental Laboratory, Clinic or Lab
Musical Instrument Sales or Repair
Optical Goods Sales
Outdoor Café
Outdoor Fruit and Vegetable Markets
Painting and Wallpaper Sales
Paints and Varnishes

Conditional
Patio Homes
Photofinishing Laboratory & Studio
Poultry
Printing, Publishing and Distributing
Psychiatric Hospital
Retail Shops Ancillary To Studio \ Workshop
Radio \ Television or T&T Station With Transmitter Tower
Refrigerator or Large Appliance Repair
Restaurant
Retail Shops \ Facilities
Sporting Goods and Toys Sales
Sports and Recreation Club, Firing Range: Indoor
Telephone Exchanges
Television, Radio or Electronics Repair (No Outside Storage)

Source: Compiled by the Consultants

Restricted Uses

All uses except permitted and conditionally permitted uses are restricted in this zone.

Institutional Zone

Landuse Permitted

The following uses in the tables are proposed to be applicable for this zone only.

Table No. A.13: Landuse Permitted

Permitted
Addiction Treatment Center
Billboards, Advertisements & Advertising Structure
Art Gallery, Art Studio \ Workshop
Automobile Driving Academy
Confectionery Shop
Bus Passenger Shelter
Child Daycare \ Preschool
College, University, Technical Institute
Communication Service Facilities
Communication Tower Within Permitted Height
Conference Center
Correctional Institution
Cultural Exhibits and Libraries
Cyber Café
Freight Transport Facility
General Store
Grocery Store
High School
Hospital
Lithographic or Print Shop
Mosque, Place Of Worship
Multi-Storey Car Park
Newspaper Stand
Nursery School
Outdoor Religious Events
Photocopying and Duplicating Services
Post Office

Permitted
Primary School
Professional Office
Project Identification Signs
Property Management Signs
Public Transport Facility
Satellite Dish Antenna
School (Retarded)
Scientific Research Establishment
Shelter (Passers By)
Specialized School: Dance, Art, Music & Others
Training Centre
Transmission Lines
Utility Lines
Vocational, Business, Secretarial School
Woodlot
ATM Booth
Water Pump \ Reservoir
Social Forestry
Dormitory
Veterinary School \ College and Hospital

Source: Compiled by the Consultants

Landuse Conditionally Permitted

The following uses may be permitted or denied in this zone after review and approval by the authority/committee.

Table No. A.14: Landuse Conditionally Permitted

Conditional
Auditorium, Coliseum, Meeting Halls, and Conference Facilities, Convention
Bank & Financial Institution
Barber Shop
Boarding and Rooming House
Book or Stationery Store or Newsstand
Coffee Shop \ Tea Stall
Counseling Services
Courier Service
Plantation (Except Narcotic Plant)
Daycare Center (Commercial or Nonprofit)
Doctor \ Dentist Chamber
Drug Store or Pharmacy
Fast Food Establishment \ Food Kiosk
Flowers, Nursery Stock and Florist Supplies
Gallery \ Museum
Garages
Indoor Theatre
orphanage
Outdoor Café
Parking Lot

Conditional
Pipelines and Utility Lines
Postal Facilities
Psychiatric Hospital

Source: Compiled by the Consultants

Restricted Uses

All uses except permitted and conditionally permitted uses are restricted in this zone.

Administrative Zone

Landuse Permitted

The following uses in the tables are proposed to be applicable for this zone only.

Table No. A.15: Landuse Permitted

Permitted
Accounting, Auditing or Bookkeeping Services
Billboards, Advertisements & Advertising Structure
Confectionery Shop
Bus Passenger Shelter
Civic Administration
Communication Service Facilities
Communication Tower Within Permitted Height
Construction, Survey, Soil Testing Firms
Cultural Exhibits and Libraries
Cyber Café
Emergency Shelter
Freight Transport Facility
General Store
Project Office
Government Office
Grocery Store
Guest House
Multi-Storey Car Park
Newspaper Stand
Outdoor Religious Events
Photocopying and Duplicating Services
Post Office
Professional Office
Public Transport Facility
Satellite Dish Antenna
Scientific Research Establishment
Shelter (Passers By)
Training Centre
Transmission Lines
Utility Lines
Woodlot
ATM Booth
Water Pump \ Reservoir

Permitted
Social Forestry

Source: Compiled by the Consultants

Landuse Conditionally Permitted

The following uses may be permitted or denied in this zone after review and approval by the authority/committee.

Table No. A.16: Landuse Conditionally Permitted

Conditional
Amusement and Recreation (Indoors)
Auditorium, Coliseum, Meeting Halls, and Conference Facilities, Convention
Bank & Financial Institution
Boarding and Rooming House
Book or Stationery Store or Newsstand
Coffee Shop \ Tea Stall
Conference Center
Courier Service
Plantation (Except Narcotic Plant)
Daycare Center (Commercial or Nonprofit)
Detention Facilities
Doctor \ Dentist Chamber
Energy Installation
Fast Food Establishment \ Food Kiosk
Flowers, Nursery Stock and Florist Supplies
Freight Handling, Storage & Distribution
Freight Yard
Gallery \ Museum
Garages
Police Box \ Barrack
Fire \ Rescue Station
Lithographic or Print Shop
Mosque, Place Of Worship
Outdoor Café
Parking Lot
Parking Lot (Commercial)
Pipelines and Utility Lines
Postal Facilities

Source: Compiled by the Consultants

Restricted Uses

All uses except permitted and conditionally permitted uses are restricted in this zone.

Agricultural Zone

Landuse Permitted

The following uses in the tables are proposed to be applicable for this zone only.

Table No. A.17: Landuse Permitted

Permitted
Food Grain Cultivation
Vegetable Cultivation
Cash Crop Cultivation
Horticulture
Arboriculture
Dairy Firming
Deep Tube Well
Shallow Tube Well
Irrigation Facilities (Irrigation Canal, Culvert, Flood Wall etc)
Temporary Structure (Agricultural)
Animal Shelter
Duckery
Aquatic Recreation Facility (Without Structure)
Tree Plantation (Except Narcotic Plant)
Aquaculture
Static Transformer Stations
Transmission Lines
Utility Lines
Woodlot
Social Forestry

Source: Compiled by the Consultants

Landuse Conditionally Permitted

Table No. A.18: Landuse Conditionally Permitted

Conditional
Graveyard \ Cemetery
Communication Tower Within Permitted Height
Crematorium
Fish Hatchery
Garden Center or Retail Nursery
Poultry

Source: Compiled by the Consultants

Restricted Uses

All uses except permitted and conditionally permitted uses are restricted in this zone.

Open Space

Landuse Permitted

The following uses in the tables are proposed to be applicable for this zone only.

Table No. A.19: Landuse Permitted

Permitted
Botanical Garden & Arboretum
Bus Passenger Shelter
Caravan Park \ Camping Ground
Carnivals and Fairs
Circus

Permitted
Plantation (Except Narcotic Plant)
Landscape and Horticultural Services
Open Theater
Park and Recreation Facilities (General)
Pipelines and Utility Lines
Playing Field
Special Function Tent
Tennis Club
Transmission Lines
Urban-Nature Reserve
Utility Lines
Woodlot
Zoo
Roadside Parking
Social Forestry
Memorial Structure

Source: Compiled by the Consultants

Landuse Conditionally Permitted

Table No. A.20: Landuse Conditionally Permitted

Conditional
Communication Tower Within Permitted Height
Trade Shows
Fitness Centre
Flowers, Nursery Stock and Florist Supplies
Golf Course
Motorized Recreation
Outdoor Recreation Facilities
Outdoor Recreation, Commercial
Outdoor Sports and Recreation
Park Maintenance Facility
Retreat Center
Sports and Recreation Club, Firing Range: Indoor

Source: Compiled by the Consultants

Restricted Uses

All uses except permitted and conditionally permitted uses are restricted.

Water Retention Area

Retaining water is the main purpose of this type of Landuse.

Landuse Permitted

The following uses in the tables are proposed to be applicable for this zone only.

Table No. A.21: Landuse Permitted

Permitted
Aquatic Recreation Facility (Without Structure)
Fishing Club
Utility Lines
Water Parks
Memorial Structure

Source: Compiled by the Consultants

Landuse Conditionally Permitted

The following uses may be permitted or denied in this zone after review and approval by the authority/committee.

Table No. A.22: Landuse Conditionally Permitted

Conditional
Plantation (Except Narcotic Plant)
Marina \ Boating Facility
Motorized Recreation

Source: Compiled by the Consultants

Water body

Landuse Permitted

The following uses in the tables are proposed to be applicable for this zone only.

Table No. A.23: Landuse Permitted

Permitted
Aquatic Recreation Facility (Without Structure)
Fishing Club
Utility Lines
Water Parks
Memorial Structure

Source: Compiled by the Consultants

Landuse Conditionally Permitted

The following uses may be permitted or denied in this zone after review and approval by the authority/committee.

Table No. A.24: Landuse Conditionally Permitted

Conditional
Plantation (Except Narcotic Plant)
Marina \ Boating Facility
Motorized Recreation

Source: Compiled by the Consultants

Restricted Uses

All uses except permitted and conditionally permitted uses are restricted.

ANNEXURE-C

Resolation of Final Consultation Meeting and Attendance

ANNEXURE-D

Details of Road Network Proposal

Road ID	Width (feet)	Length (m)	Phase	Type	Ward no
RP01	120	111.11	2nd	W	Out-side
RP01	120	1,358.68	2nd	W	Ward No. 09
RP01	120	3,440.42	2nd	W	Ward No. 07
RP01	120	2,197.25	2nd	W	Ward No. 03
RP01	120	152.44	2nd	W	Ward No. 04
RP01	120	1,829.05	2nd	W	Ward No. 05
RP01	120	1,068.12	2nd	W	Ward No. 01
RP02	80	32.22	2nd	W	Out-side
RP02	80	1,566.38	2nd	W	Ward No. 07
RP02	80	270.48	2nd	W	Ward No. 05
RS04	60	7.04	1st	W	Out-side
RS04	60	618.04	1st	W	Ward No. 09
RS04	60	1,715.48	1st	W	Ward No. 08
RS04	60	166.31	1st	W	Ward No. 07
RS03	60	1,739.70	1st	W	Ward No. 02
RS03	60	929.39	1st	W	Ward No. 03
RS03	60	669.32	1st	W	Ward No. 01
RS37	40	78.64	1st	W	Out-side
RS38	40	0.64	1st	W	Out-side
RS09	40	2.52	1st	W	Out-side
RS10	40	3.22	3rd	W	Out-side
RS40	40	61.28	3rd	W	Out-side
RS11	40	268.44	3rd	N	Out-side
RS43	40	3.29	2nd	W	Out-side
RS25	40	2.84	3rd	W	Out-side
RS29	40	1.44	3rd	W	Out-side
RS35	40	55.22	1st	W	Out-side
RS37	40	983.15	1st	W	Ward No. 03
RS37	40	464.45	1st	W	Ward No. 01
RS05	40	599.38	1st	W	Ward No. 01
RS06	40	386.05	2nd	W	Ward No. 01
RS38	40	979.41	1st	W	Ward No. 03
RS07	40	62.33	1st	W	Ward No. 03
RS08	60	272.93	1st	W	Ward No. 08
RS08	60	540.00	1st	W	Ward No. 07
RS08	60	92.23	1st	W	Ward No. 04
RS08	60	2,036.88	1st	W	Ward No. 06
RS34	40	1,232.66	1st	W	Ward No. 09
RS09	40	820.43	1st	W	Ward No. 07
RS10	40	1,148.53	3rd	W	Ward No. 09
RS40	40	921.01	3rd	W	Ward No. 09
RS11	40	146.04	3rd	N	Ward No. 09
RS11	40	1,113.98	3rd	N	Ward No. 08
RS12	40	371.03	3rd	N	Ward No. 09
RS12	40	438.82	3rd	N	Ward No. 08

Road ID	Width (feet)	Length (m)	Phase	Type	Ward no
RS13	40	682.45	2nd	W	Ward No. 08
RS13	40	115.19	2nd	W	Ward No. 07
RS14	40	118.32	2nd	W	Ward No. 08
RS14	40	1,222.73	2nd	W	Ward No. 07
RS55	40	1,288.94	2nd	W	Ward No. 07
RS55	40	1,086.33	2nd	W	Ward No. 06
RS56	40	752.31	2nd	W	Ward No. 07
RS10	40	147.52	3rd	N	Ward No. 08
RS16	40	1,273.68	3rd	N	Ward No. 03
RS16	40	395.42	3rd	N	Ward No. 05
RS41	40	88.97	2nd	W	Ward No. 03
RS41	40	114.25	2nd	W	Ward No. 04
RS41	40	298.36	2nd	W	Ward No. 05
RS17	40	1,071.73	3rd	W	Ward No. 05
RS18	40	390.36	3rd	N	Ward No. 05
RS43	40	796.28	2nd	W	Ward No. 03
RS44	40	536.84	2nd	N	Ward No. 05
RS46	40	797.34	3rd	N	Ward No. 03
RS19	40	406.49	3rd	N	Ward No. 03
RS20	40	631.52	2nd	W	Ward No. 03
RS47	40	90.00	2nd	W	Ward No. 02
RS47	40	119.80	2nd	W	Ward No. 03
RS21	40	399.85	2nd	W	Ward No. 02
RS21	40	55.45	2nd	W	Ward No. 03
RS05	40	203.95	1st	N	Ward No. 01
RS22	40	99.16	2nd	W	Ward No. 07
RS22	40	1,626.92	2nd	W	Ward No. 06
RS48	40	130.45	3rd	W	Ward No. 06
RS53	40	1,670.40	1st	W	Ward No. 02
RS53	40	1,679.93	1st	W	Ward No. 04
RS49	40	298.71	3rd	N	Ward No. 02
RS49	40	410.64	3rd	N	Ward No. 01
RS23	40	676.08	2nd	W	Ward No. 01
RS24	40	1,108.29	2nd	W	Ward No. 02
RS51	40	165.41	3rd	W	Ward No. 02
RS51	40	413.55	3rd	W	Ward No. 01
RS25	40	1,029.95	3rd	W	Ward No. 01
RS26	40	548.16	3rd	W	Ward No. 02
RS27	40	1,800.25	2nd	W	Ward No. 02
RS27	40	173.86	2nd	W	Ward No. 04
RS28	40	243.50	3rd	N	Ward No. 07
RS28	40	732.04	3rd	N	Ward No. 06
RS29	40	1,070.97	3rd	W	Ward No. 04
RS30	40	1,570.14	3rd	W	Ward No. 02
RS31	40	548.06	3rd	N	Ward No. 02
RS32	40	115.58	3rd	W	Ward No. 03
RS33	40	478.32	2nd	W	Ward No. 04
RS33	40	798.40	2nd	W	Ward No. 05
RS35	40	278.59	1st	W	Ward No. 09

Road ID	Width (feet)	Length (m)	Phase	Type	Ward no
RS50	40	447.08	3rd	N	Ward No. 02
RS08	40	214.54	2nd	N	Ward No. 03
RS08	40	1,675.05	2nd	N	Ward No. 04
RS12	40	135.20	3rd	W	Ward No. 08
RS16	40	436.83	3rd	W	Ward No. 05
RS18	40	348.29	3rd	W	Ward No. 05
RS39	40	343.36	1st	W	Ward No. 03
RS39	40	25.61	1st	W	Ward No. 04
RS36	40	256.62	1st	W	Ward No. 01
RS23	40	321.38	2nd	N	Ward No. 01
RS23	40	193.37	2nd	W	Ward No. 01
RS52	40	334.13	3rd	W	Ward No. 02
RS24	40	737.59	2nd	N	Ward No. 02
RS26	40	157.83	3rd	W	Ward No. 02
RS26	40	167.00	3rd	N	Ward No. 02
RS42	40	402.90	2nd	W	Ward No. 05
RS42	40	83.39	2nd	N	Ward No. 05
RS44	40	90.67	2nd	W	Ward No. 03
RS45	40	735.64	3rd	N	Ward No. 03
RS49	40	382.93	3rd	N	Ward No. 01
RS49	40	109.25	3rd	W	Ward No. 01
RS51	40	518.25	3rd	N	Ward No. 01
RS52	40	190.30	3rd	N	Ward No. 02
RS54	40	133.42	1st	W	Ward No. 04
RS54	40	388.43	1st	W	Ward No. 05
RS54	40	1,516.03	1st	W	Ward No. 06
RS56	40	238.11	2nd	N	Ward No. 07
RS167	40	249.69	2nd	N	Ward No. 03
RS167	40	1,167.17	2nd	N	Ward No. 04
RL106	30	0.39	1st	W	Out-side
RL60	30	2.86	1st	W	Out-side
RL62	30	1.04	2nd	W	Out-side
RL63	30	3.25	1st	W	Out-side
RL72	30	1.10	3rd	W	Out-side
RL73	30	21.00	3rd	W	Out-side
RL75	30	0.45	3rd	W	Out-side
RL112	30	3.47	2nd	W	Out-side
RL82	30	4.18	3rd	N	Out-side
RL121	30	1.90	2nd	W	Out-side
RL91	30	135.59	1st	W	Out-side
RL125	30	4.23	2nd	W	Out-side
RL57	30	244.50	1st	W	Ward No. 03
RL58	30	575.01	1st	W	Ward No. 09
RL59	30	622.43	1st	W	Ward No. 09
RL106	30	561.19	1st	W	Ward No. 09
RL60	30	787.26	1st	W	Ward No. 09
RL104	30	361.80	2nd	N	Ward No. 09
RL101	30	615.35	1st	W	Ward No. 07
RL109	30	156.49	2nd	N	Ward No. 07

Road ID	Width (feet)	Length (m)	Phase	Type	Ward no
RL107	30	232.30	1st	W	Ward No. 07
RL61	30	564.06	1st	W	Ward No. 07
RL62	30	981.42	2nd	W	Ward No. 07
RL63	30	1,053.12	1st	W	Ward No. 07
RL111	30	800.40	1st	W	Ward No. 07
RL65	30	459.26	2nd	W	Ward No. 07
RL65	30	732.49	1st	W	Ward No. 07
RL110	30	533.35	2nd	W	Ward No. 07
RL66	30	400.67	2nd	W	Ward No. 08
RL133	30	930.57	2nd	W	Ward No. 07
RL67	30	293.37	3rd	W	Ward No. 08
RL67	30	212.51	3rd	W	Ward No. 07
RL68	30	476.22	2nd	W	Ward No. 08
RL68	30	171.18	2nd	W	Ward No. 07
RL69	30	1,331.46	3rd	W	Ward No. 07
RL69	30	65.28	3rd	W	Ward No. 06
RL70	30	1,158.82	1st	W	Ward No. 07
RL71	30	158.95	3rd	W	Ward No. 07
RL72	30	382.80	3rd	W	Ward No. 07
RL73	30	643.41	3rd	W	Ward No. 08
RL134	30	613.34	2nd	W	Ward No. 08
RL74	30	324.67	3rd	N	Ward No. 07
RL75	30	455.14	3rd	W	Ward No. 07
RL76	30	239.37	3rd	W	Ward No. 05
RL77	30	1,088.55	2nd	W	Ward No. 05
RL112	30	1,089.57	2nd	W	Ward No. 05
RL78	30	187.68	3rd	W	Ward No. 05
RL79	30	721.09	2nd	W	Ward No. 03
RL113	30	217.76	2nd	W	Ward No. 03
RL80	30	481.52	3rd	N	Ward No. 05
RL81	30	266.41	3rd	N	Ward No. 05
RL115	30	306.13	1st	W	Ward No. 03
RL82	30	1,004.16	3rd	N	Ward No. 03
RL117	30	408.10	2nd	W	Ward No. 03
RL118	30	322.87	1st	N	Ward No. 03
RL83	30	278.70	2nd	W	Ward No. 03
RL121	30	822.87	2nd	W	Ward No. 01
RL84	30	249.41	2nd	W	Ward No. 06
RL131	30	266.69	3rd	W	Ward No. 06
RL85	30	404.26	2nd	W	Ward No. 01
RL86	30	267.95	2nd	W	Ward No. 01
RL123	30	318.12	3rd	N	Ward No. 01
RL87	30	192.82	2nd	W	Ward No. 07
RL88	30	288.88	2nd	W	Ward No. 07
RL89	30	355.36	2nd	W	Ward No. 07
RL90	30	210.42	2nd	W	Ward No. 07
RL132	30	205.66	3rd	N	Ward No. 07
RL132	30	61.92	3rd	N	Ward No. 06
RL91	30	846.06	1st	W	Ward No. 06

Road ID	Width (feet)	Length (m)	Phase	Type	Ward no
RL130	30	537.39	2nd	W	Ward No. 04
RL130	30	693.86	2nd	W	Ward No. 06
RL127	30	4.56	1st	W	Ward No. 02
RL127	30	315.68	1st	W	Ward No. 04
RL128	30	565.54	2nd	W	Ward No. 04
RL92	30	508.69	2nd	W	Ward No. 04
RL93	30	105.06	2nd	W	Ward No. 02
RL93	30	193.50	2nd	W	Ward No. 04
RL129	30	77.74	2nd	W	Ward No. 02
RL129	30	75.16	2nd	W	Ward No. 04
RL126	30	382.08	2nd	W	Ward No. 02
RL94	30	237.62	2nd	W	Ward No. 02
RL95	30	398.53	2nd	W	Ward No. 01
RL96	30	420.10	3rd	W	Ward No. 03
RL97	30	292.89	3rd	W	Ward No. 03
RL122	30	646.63	3rd	N	Ward No. 03
RL98	30	330.49	3rd	N	Ward No. 03
RL100	30	638.74	2nd	W	Ward No. 05
RL102	30	286.28	1st	W	Ward No. 03
RL103	30	658.50	2nd	W	Ward No. 04
RL135	30	77.95	1st	W	Ward No. 09
RL120	30	371.18	1st	W	Ward No. 02
RL120	30	177.49	1st	W	Ward No. 01
RL124	30	344.76	3rd	N	Ward No. 01
RL58	30	117.92	1st	N	Ward No. 09
RL108	30	107.97	2nd	W	Ward No. 07
RL101	30	595.01	1st	N	Ward No. 07
RL74	30	259.12	3rd	W	Ward No. 07
RL80	30	147.04	3rd	W	Ward No. 03
RL80	30	2.72	3rd	W	Ward No. 05
RL84	30	157.05	2nd	N	Ward No. 06
RL87	30	59.49	2nd	N	Ward No. 07
RL87	30	80.45	2nd	N	Ward No. 06
RL90	30	73.01	2nd	N	Ward No. 07
RL90	30	64.51	2nd	N	Ward No. 06
RL105	30	546.67	1st	W	Ward No. 09
RL127	30	153.12	1st	N	Ward No. 04
RL93	30	101.21	2nd	N	Ward No. 04
RL92	30	388.42	2nd	N	Ward No. 04
RL122	30	415.48	3rd	W	Ward No. 03
RL114	30	44.49	2nd	W	Ward No. 03
RL115	30	165.07	1st	N	Ward No. 03
RL118	30	197.15	1st	W	Ward No. 03
RL118	30	277.38	1st	N	Ward No. 03
RL116	30	146.40	2nd	W	Ward No. 03
RL119	30	295.57	1st	W	Ward No. 02
RL123	30	107.73	3rd	W	Ward No. 01
RL125	30	223.95	2nd	W	Ward No. 02
RL91	30	59.50	1st	W	Ward No. 06

Road ID	Width (feet)	Length (m)	Phase	Type	Ward no
RL91	30	228.81	1st	N	Ward No. 06
RL132	30	148.69	3rd	W	Ward No. 07
RL132	30	0.06	3rd	W	Ward No. 06
RL99	30	1,072.67	2nd	W	Ward No. 04
RL99	30	495.80	2nd	W	Ward No. 05
RA136	20	0.70	1st	W	Out-side
RA163	20	1.36	1st	W	Out-side
RA152	20	75.88	1st	W	Out-side
RA136	20	724.37	1st	W	Ward No. 09
RA137	20	335.64	1st	W	Ward No. 09
RA166	20	542.31	2nd	W	Ward No. 08
RA157	20	26.61	3rd	N	Ward No. 09
RA157	20	327.75	3rd	N	Ward No. 08
RA138	20	217.75	2nd	W	Ward No. 05
RA139	20	205.00	2nd	W	Ward No. 05
RA140	20	235.06	2nd	W	Ward No. 05
RA141	20	227.73	2nd	W	Ward No. 05
RA142	20	241.94	2nd	N	Ward No. 03
RA142	20	48.75	2nd	N	Ward No. 05
RA143	20	316.67	1st	W	Ward No. 03
RA158	20	323.77	1st	W	Ward No. 03
RA159	20	877.17	1st	W	Ward No. 03
RA144	20	627.43	1st	W	Ward No. 03
RA145	20	201.69	2nd	N	Ward No. 06
RA146	20	197.66	2nd	N	Ward No. 06
RA161	20	327.78	2nd	W	Ward No. 01
RA147	20	368.59	2nd	W	Ward No. 01
RA164	20	656.81	1st	W	Ward No. 07
RA148	20	291.54	1st	W	Ward No. 07
RA149	20	171.18	1st	W	Ward No. 07
RA150	20	268.47	1st	W	Ward No. 02
RA151	20	194.76	1st	W	Ward No. 02
RA163	20	279.49	1st	W	Ward No. 02
RA152	20	419.76	1st	W	Ward No. 01
RA153	20	152.36	1st	W	Ward No. 01
RA154	20	469.30	1st	W	Ward No. 02
RA165	20	422.25	3rd	W	Ward No. 08
RA155	20	276.87	2nd	W	Ward No. 08
RA142	20	93.36	2nd	W	Ward No. 03
RA146	20	186.61	2nd	W	Ward No. 06
RA162	20	100.11	1st	W	Ward No. 02
RA156	20	22.20	3rd	N	Ward No. 09
RA157	20	314.04	3rd	W	Ward No. 08
RA157	20	26.29	3rd	W	Ward No. 07
RA160	20	255.28	1st	W	Ward No. 03
Total		128,015.34			

Note:

- *W= widening, N= New Road*
- *The drain which is outside but very close to the boundary of the Pauurashava but very essential for the network Indicated as Outside Road.*

ANNEXURE-E

Details Drianage Network Proposal

Drain ID	Type	Length (m)	Phase	Ward No
DP04	Primary	7.04	1st	Out-side
DP02	Primary	39.65	2nd	Out-side
DP01	Primary	134.90	2nd	Out-side
DP04	Primary	618.04	1st	Ward No. 09
DP04	Primary	1,715.48	1st	Ward No. 08
DP04	Primary	166.31	1st	Ward No. 07
DP03	Primary	1,739.70	1st	Ward No. 02
DP03	Primary	929.39	1st	Ward No. 03
DP03	Primary	669.32	1st	Ward No. 01
DP02	Primary	1,566.38	2nd	Ward No. 07
DP02	Primary	270.48	2nd	Ward No. 05
DP01	Primary	1,358.68	2nd	Ward No. 09
DP01	Primary	3,440.42	2nd	Ward No. 07
DP01	Primary	2,197.25	2nd	Ward No. 03
DP01	Primary	152.44	2nd	Ward No. 04
DP01	Primary	1,829.05	2nd	Ward No. 05
DP01	Primary	1,068.66	2nd	Ward No. 01
DS106	Secondary	0.39	1st	Out-side
DS60	Secondary	2.86	1st	Out-side
DS62	Secondary	8.47	2nd	Out-side
DS112	Secondary	3.47	2nd	Out-side
DS37	Secondary	78.64	1st	Out-side
DS38	Secondary	0.64	1st	Out-side
DS09	Secondary	2.52	1st	Out-side
DS10	Secondary	3.22	3rd	Out-side
DS40	Secondary	61.28	3rd	Out-side
DS11	Secondary	268.44	3rd	Out-side
DS43	Secondary	3.29	2nd	Out-side
DS25	Secondary	2.84	3rd	Out-side
DS30	Secondary	10.35	3rd	Out-side
DS35	Secondary	55.22	1st	Out-side
DS142	Secondary	241.94	2nd	Ward No. 03
DS142	Secondary	48.75	2nd	Ward No. 05
DS58	Secondary	575.01	1st	Ward No. 09
DS59	Secondary	622.43	1st	Ward No. 09
DS106	Secondary	561.19	1st	Ward No. 09
DS60	Secondary	787.26	1st	Ward No. 09
DS104	Secondary	361.80	2nd	Ward No. 09
DS101	Secondary	615.35	1st	Ward No. 07
DS109	Secondary	156.49	2nd	Ward No. 07
DS107	Secondary	232.30	1st	Ward No. 07
DS61	Secondary	564.06	1st	Ward No. 07
DS62	Secondary	981.42	2nd	Ward No. 07
DS67	Secondary	293.37	3rd	Ward No. 08
DS67	Secondary	212.51	3rd	Ward No. 07
DS69	Secondary	1,331.46	3rd	Ward No. 07

Drain ID	Type	Length (m)	Phase	Ward No
DS69	Secondary	65.28	3rd	Ward No. 06
DS76	Secondary	239.37	3rd	Ward No. 05
DS77	Secondary	1,088.55	2nd	Ward No. 05
DS112	Secondary	1,089.57	2nd	Ward No. 05
DS79	Secondary	721.09	2nd	Ward No. 03
DS113	Secondary	217.76	2nd	Ward No. 03
DS80	Secondary	481.52	3rd	Ward No. 05
DS81	Secondary	266.41	3rd	Ward No. 05
DS84	Secondary	249.41	2nd	Ward No. 06
DS85	Secondary	404.26	2nd	Ward No. 01
DS86	Secondary	267.95	2nd	Ward No. 01
DS123	Secondary	318.12	3rd	Ward No. 01
DS132	Secondary	205.66	3rd	Ward No. 07
DS132	Secondary	61.92	3rd	Ward No. 06
DS122	Secondary	646.63	3rd	Ward No. 03
DS37	Secondary	983.15	1st	Ward No. 03
DS37	Secondary	464.45	1st	Ward No. 01
DS05	Secondary	599.38	1st	Ward No. 01
DS38	Secondary	979.41	1st	Ward No. 03
DS08	Secondary	272.93	1st	Ward No. 08
DS08	Secondary	540.00	1st	Ward No. 07
DS08	Secondary	92.23	1st	Ward No. 04
DS08	Secondary	2,036.88	1st	Ward No. 06
DS34	Secondary	1,232.66	1st	Ward No. 09
DS09	Secondary	820.43	1st	Ward No. 07
DS10	Secondary	1,148.53	3rd	Ward No. 09
DS40	Secondary	921.01	3rd	Ward No. 09
DS11	Secondary	146.04	3rd	Ward No. 09
DS11	Secondary	1,113.98	3rd	Ward No. 08
DS12	Secondary	371.03	3rd	Ward No. 09
DS12	Secondary	438.82	3rd	Ward No. 08
DS13	Secondary	682.45	2nd	Ward No. 08
DS13	Secondary	115.19	2nd	Ward No. 07
DS14	Secondary	118.32	2nd	Ward No. 08
DS14	Secondary	1,222.73	2nd	Ward No. 07
DS55	Secondary	1,288.94	2nd	Ward No. 07
DS55	Secondary	1,086.33	2nd	Ward No. 06
DS56	Secondary	752.31	2nd	Ward No. 07
DS16	Secondary	1,273.68	3rd	Ward No. 03
DS16	Secondary	395.42	3rd	Ward No. 05
DS41	Secondary	88.97	2nd	Ward No. 03
DS41	Secondary	114.25	2nd	Ward No. 04
DS41	Secondary	298.36	2nd	Ward No. 05
DS17	Secondary	1,071.73	3rd	Ward No. 05
DS18	Secondary	390.36	3rd	Ward No. 05
DS43	Secondary	796.28	2nd	Ward No. 03
DS44	Secondary	536.84	2nd	Ward No. 05
DS46	Secondary	797.34	3rd	Ward No. 03
DS19	Secondary	406.49	3rd	Ward No. 03

Drain ID	Type	Length (m)	Phase	Ward No
DS20	Secondary	631.52	2nd	Ward No. 03
DS47	Secondary	90.00	2nd	Ward No. 02
DS47	Secondary	119.80	2nd	Ward No. 03
DS21	Secondary	399.85	2nd	Ward No. 02
DS21	Secondary	55.45	2nd	Ward No. 03
DS22	Secondary	99.16	2nd	Ward No. 07
DS22	Secondary	1,626.92	2nd	Ward No. 06
DS49	Secondary	298.71	3rd	Ward No. 02
DS49	Secondary	410.64	3rd	Ward No. 01
DS23	Secondary	676.08	2nd	Ward No. 01
DS24	Secondary	1,108.29	2nd	Ward No. 02
DS51	Secondary	165.41	3rd	Ward No. 02
DS51	Secondary	413.55	3rd	Ward No. 01
DS25	Secondary	1,029.95	3rd	Ward No. 01
DS26	Secondary	548.16	3rd	Ward No. 02
DS28	Secondary	243.50	3rd	Ward No. 07
DS28	Secondary	732.04	3rd	Ward No. 06
DS30	Secondary	1,570.61	3rd	Ward No. 02
DS35	Secondary	278.59	1st	Ward No. 09
DS124	Secondary	344.76	3rd	Ward No. 01
DS50	Secondary	447.08	3rd	Ward No. 02
DS08	Secondary	321.82	2nd	Ward No. 03
DS08	Secondary	1,748.94	2nd	Ward No. 04
DS12	Secondary	135.20	3rd	Ward No. 08
DS16	Secondary	436.83	3rd	Ward No. 05
DS18	Secondary	348.29	3rd	Ward No. 05
DS39	Secondary	343.36	1st	Ward No. 03
DS39	Secondary	25.61	1st	Ward No. 04
DS36	Secondary	256.62	1st	Ward No. 01
DS23	Secondary	321.38	2nd	Ward No. 01
DS23	Secondary	193.37	2nd	Ward No. 01
DS52	Secondary	334.13	3rd	Ward No. 02
DS24	Secondary	737.59	2nd	Ward No. 02
DS26	Secondary	157.83	3rd	Ward No. 02
DS26	Secondary	167.00	3rd	Ward No. 02
DS42	Secondary	402.90	2nd	Ward No. 05
DS42	Secondary	83.39	2nd	Ward No. 05
DS44	Secondary	90.67	2nd	Ward No. 03
DS45	Secondary	735.64	3rd	Ward No. 03
DS49	Secondary	382.93	3rd	Ward No. 01
DS49	Secondary	109.25	3rd	Ward No. 01
DS51	Secondary	518.25	3rd	Ward No. 01
DS52	Secondary	190.30	3rd	Ward No. 02
DS56	Secondary	238.11	2nd	Ward No. 07
DS58	Secondary	117.92	1st	Ward No. 09
DS108	Secondary	107.97	2nd	Ward No. 07
DS101	Secondary	595.01	1st	Ward No. 07
DS80	Secondary	147.04	3rd	Ward No. 03
DS80	Secondary	2.72	3rd	Ward No. 05

Drain ID	Type	Length (m)	Phase	Ward No
DS84	Secondary	157.05	2nd	Ward No. 06
DS105	Secondary	546.67	1st	Ward No. 09
DS122	Secondary	415.48	3rd	Ward No. 03
DS123	Secondary	107.73	3rd	Ward No. 01
DS132	Secondary	148.69	3rd	Ward No. 07
DS132	Secondary	0.06	3rd	Ward No. 06
DS142	Secondary	93.36	2nd	Ward No. 03
DS33	Secondary	291.56	2nd	Ward No. 05
DS136	Tertiary	0.70	1st	Out-side
DT163	Tertiary	1.36	1st	Out-side
DT152	Tertiary	75.88	1st	Out-side
DT63	Tertiary	3.25	1st	Out-side
DT72	Tertiary	1.10	3rd	Out-side
DT73	Tertiary	21.00	3rd	Out-side
DT75	Tertiary	0.45	3rd	Out-side
DT121	Tertiary	48.01	2nd	Out-side
DT06	Tertiary	19.01	2nd	Out-side
DT125	Tertiary	4.23	2nd	Out-side
DT91	Tertiary	130.27	1st	Out-side
DT136	Tertiary	724.37	1st	Ward No. 09
DT137	Tertiary	335.64	1st	Ward No. 09
DT166	Tertiary	542.31	2nd	Ward No. 08
DT157	Tertiary	26.61	3rd	Ward No. 09
DT157	Tertiary	327.75	3rd	Ward No. 08
DT138	Tertiary	217.75	2nd	Ward No. 05
DT139	Tertiary	205.00	2nd	Ward No. 05
DT140	Tertiary	235.06	2nd	Ward No. 05
DT141	Tertiary	227.73	2nd	Ward No. 05
DT143	Tertiary	316.67	1st	Ward No. 03
DT158	Tertiary	323.77	1st	Ward No. 03
DT159	Tertiary	877.17	1st	Ward No. 03
DT144	Tertiary	627.43	1st	Ward No. 03
DT145	Tertiary	201.69	2nd	Ward No. 06
DT146	Tertiary	197.66	2nd	Ward No. 06
DT161	Tertiary	327.78	2nd	Ward No. 01
DT147	Tertiary	368.59	2nd	Ward No. 01
DT164	Tertiary	656.81	1st	Ward No. 07
DT148	Tertiary	291.54	1st	Ward No. 07
DT149	Tertiary	171.18	1st	Ward No. 07
DT150	Tertiary	268.47	1st	Ward No. 02
DT151	Tertiary	194.76	1st	Ward No. 02
DT163	Tertiary	279.49	1st	Ward No. 02
DT152	Tertiary	419.76	1st	Ward No. 01
DT153	Tertiary	152.36	1st	Ward No. 01
DT154	Tertiary	469.30	1st	Ward No. 02
DT63	Tertiary	1,053.12	1st	Ward No. 07
DT111	Tertiary	800.40	1st	Ward No. 07
DT65	Tertiary	459.26	2nd	Ward No. 07
DT65	Tertiary	732.49	1st	Ward No. 07

Drain ID	Type	Length (m)	Phase	Ward No
DT110	Tertiary	533.35	2nd	Ward No. 07
DT66	Tertiary	400.67	2nd	Ward No. 08
DT133	Tertiary	930.57	2nd	Ward No. 07
DT68	Tertiary	476.22	2nd	Ward No. 08
DT68	Tertiary	171.18	2nd	Ward No. 07
DT70	Tertiary	1,158.82	1st	Ward No. 07
DT71	Tertiary	158.95	3rd	Ward No. 07
DT72	Tertiary	382.80	3rd	Ward No. 07
DT73	Tertiary	643.41	3rd	Ward No. 08
DT134	Tertiary	613.34	2nd	Ward No. 08
DT74	Tertiary	324.67	3rd	Ward No. 07
DT75	Tertiary	455.14	3rd	Ward No. 07
DT115	Tertiary	306.13	1st	Ward No. 03
DT117	Tertiary	408.10	2nd	Ward No. 03
DT118	Tertiary	322.87	1st	Ward No. 03
DT83	Tertiary	278.70	2nd	Ward No. 03
DT121	Tertiary	822.87	2nd	Ward No. 01
DT131	Tertiary	266.69	3rd	Ward No. 06
DT87	Tertiary	192.82	2nd	Ward No. 07
DT88	Tertiary	288.88	2nd	Ward No. 07
DT89	Tertiary	355.36	2nd	Ward No. 07
DT90	Tertiary	210.42	2nd	Ward No. 07
DT127	Tertiary	4.56	1st	Ward No. 02
DT127	Tertiary	315.68	1st	Ward No. 04
DT128	Tertiary	565.54	2nd	Ward No. 04
DT92	Tertiary	508.69	2nd	Ward No. 04
DT93	Tertiary	105.06	2nd	Ward No. 02
DT93	Tertiary	193.50	2nd	Ward No. 04
DT129	Tertiary	77.74	2nd	Ward No. 02
DT129	Tertiary	75.16	2nd	Ward No. 04
DT126	Tertiary	382.08	2nd	Ward No. 02
DT94	Tertiary	237.62	2nd	Ward No. 02
DT95	Tertiary	398.53	2nd	Ward No. 01
DT96	Tertiary	420.10	3rd	Ward No. 03
DT97	Tertiary	292.89	3rd	Ward No. 03
DT06	Tertiary	386.82	2nd	Ward No. 01
DT10	Tertiary	147.52	3rd	Ward No. 08
DT05	Tertiary	203.95	1st	Ward No. 01
DT53	Tertiary	1,670.40	1st	Ward No. 02
DT53	Tertiary	1,679.93	1st	Ward No. 04
DT27	Tertiary	1,800.25	2nd	Ward No. 02
DT27	Tertiary	173.86	2nd	Ward No. 04
DT31	Tertiary	548.06	3rd	Ward No. 02
DT32	Tertiary	115.58	3rd	Ward No. 03
DT102	Tertiary	286.28	1st	Ward No. 03
DT103	Tertiary	658.50	2nd	Ward No. 04
DT165	Tertiary	422.25	3rd	Ward No. 08
DT155	Tertiary	276.87	2nd	Ward No. 08
DT120	Tertiary	371.18	1st	Ward No. 02

Drain ID	Type	Length (m)	Phase	Ward No
DT120	Tertiary	177.49	1st	Ward No. 01
DT54	Tertiary	133.42	1st	Ward No. 04
DT54	Tertiary	388.43	1st	Ward No. 05
DT54	Tertiary	1,516.03	1st	Ward No. 06
DT74	Tertiary	259.12	3rd	Ward No. 07
DT87	Tertiary	59.49	2nd	Ward No. 07
DT87	Tertiary	80.45	2nd	Ward No. 06
DT90	Tertiary	73.01	2nd	Ward No. 07
DT90	Tertiary	64.51	2nd	Ward No. 06
DT127	Tertiary	153.12	1st	Ward No. 04
DT93	Tertiary	101.21	2nd	Ward No. 04
DT92	Tertiary	388.42	2nd	Ward No. 04
DT115	Tertiary	165.07	1st	Ward No. 03
DT118	Tertiary	197.15	1st	Ward No. 03
DT118	Tertiary	277.38	1st	Ward No. 03
DT116	Tertiary	146.40	2nd	Ward No. 03
DT119	Tertiary	295.57	1st	Ward No. 02
DT125	Tertiary	223.95	2nd	Ward No. 02
DT91	Tertiary	228.81	1st	Ward No. 06
DT146	Tertiary	186.61	2nd	Ward No. 06
DT162	Tertiary	100.11	1st	Ward No. 02
DT156	Tertiary	22.20	3rd	Ward No. 09
DT157	Tertiary	314.04	3rd	Ward No. 08
DT157	Tertiary	26.29	3rd	Ward No. 07
DT160	Tertiary	255.28	1st	Ward No. 03
DT91	Tertiary	427.67	1st	Ward No. 06
Total		118,830.13		

Note: *The drain which is outside but very close to the boundary of the Pauurashava but very essential for the network Indicated as Outside Drain.*

ANNEXURE-F

Mouza Schedul of Development Proposals

Proposed facilitiles	Ward No.	CS Mouza Name	Plot No.	Area in Acre
Administration				
Administration Area	1	Tanglabari_142_00	168 part, 169 part, 170-176	3.00
	3	Sreefaltali_139_00	446-459, 460 part, 461, 467, 480 part, 181-501, 758-759, 765-797, 985, 989-990	24.21
Proupashava Bhaban	3	Goalbathan_144_01	312 part	0.23
Residential				
Planned Residential Area-1	1	Kaliakair_054_00	1009 part, 1018 part, 1025-1033, 1040-1048, 1486-1493, 1636	8.08
	3	Latifpur_353_00	325, 341 part, 342-348, 351 part, 352-371, 379, 384	15.11
Planned Residential Area-2	2	Latifpur_353_00	173 part, 174-175, 184 part, 188 part, 189-1941, 532	5.22
	3	Goalbathan_144_01	177-178, 179 part, 184-199, 200 part, 206-223, 225 part, 226-237, 240 part, 242 part	28.51
Low Income Houseing Area	9	Safipur_161_01	16 part, 18-20, 22-32, 33 part, 35 part, 36-37, 38 part, 124, 126-143, 150-152	33.81
Re-Settlement Residential Zone	2	Janurchala_051_01	53-55, 90, 95-140	35.07
Commercial Facility				
Poura Supper Market	7	Chandra_154_03	1499 part, 1508 part	0.61
Supper Market-1	2	Chandra_154_01	199 part, 200 part, 201-202, 203 part	2.05
Supper Market-2	9	Safipur_161_02	845-847, 849 part	0.48
Katcha Bazar-1	2	Janurchala_051_01	289 part, 290, 292 part, 301 part	1.00
Katcha Bazar-2	3	Goalbathan_144_01	260 part, 261 part, 290 part, 294 part, 295, 296 part, 327, 1005, 1006 part	2.94
Katcha Bazar-3	8	Purbo Chandra_162_00	207 part, 211 part, 247 part, 248 part, 250 part	1.23
Wholesale Market-1	1	Tanglabari_142_00	64 part, 73 part	0.56
Wholesale Market-2	5	Haritakitala_146_02	218 part, 220 part, 221-224, 225 part	3.38
Transportation				
Bus Terminal-1	1	Shemoiltali_141_04	24 part, 27, 29 part	0.80
Bus Terminal-2	6	Baro Kalampur_148_02	443 part, 444 part, 446-449, 454 part	10.36
	7	Chandra_154_01	87-89	1.17
Truck Terminal	1	Shemoiltali_141_04	26 part, 28, 29 part, 32 part	1.11
Railway Station	2	Janurchala_051_02	819 part	0.20

Proposed facilitiles	Ward No.	CS Mouza Name	Plot No.	Area in Acre
	3	Goalbathan_144_01	366 part, 369 part	2.69
	4	Uttar Baktarpur_145_00	2 part, 3 part	1.07
Tempo Stand-1	1	Shemoiltali_141_01	12 part, 20 part, 115 part	0.27
Tempo Stand-2	1	Shemoiltali_141_01	57 part, 59, 62 part, 63-64, 65 part	0.71
Tempo Stand-3	2	Latifpur_353_00	39 part, 57 part	0.27
Tempo Stand-4	3	Goalbathan_144_01	82-83, 94 part	1.05
Tempo Stand-5	5	Haritakitala_146_02	218 part, 219, 220 part	0.49
Tempo Stand-6	6	Baro Kalampur_148_02	345 part, 354 part	0.66
Tempo Stand-7	9	Safipur_161_01	295 part	0.14
Tempo/Rickshaw Stand-1	3	Goalbathan_144_01	300 part, 316 part, 317 part, 1089 part	0.89
Tempo/Rickshaw Stand-2	7	Chandra_154_01	95 part, 96 part, 104 part	1.40
Tempo/Rickshaw Stand-3	8	Purbo Chandra_162_00	16 part	1.59
Baby Taxi/Rickshaw Stand	9	Safipur_161_01	295 part	0.12
Ghate	1	Shemoiltali_141_01	40 part, 121 part, 122	0.41
Educational Institution				
University	3	Goalbathan_144_02	885 part, 886, 890 part, 891-896, 909, 937, 938 part, 966-981, 993, 1077, 1078	22.50
	5	Haritakrtala_146_02	116-121, 185-301, 305-317, 322, 326-327, 329 part	53.91
Technical University	4	Uttar Baktarpur_145_00	85, 86 part, 87, 88 part, 96 part, 97-113, 125-131	57.29
Medical College-1	3	Sreefaltali_139_00	520-529, 534-536, 540-553, 554 part, 560-563, 566-588, 596-600, 602 part, 603-611	14.52
Medical College-2	7	Chandra_154_04	2650-2659, 2672-2691, 2692 part, 2701-2705, 2720 part	35.92
Vocational Training Center	9	Safipur_161_02	874 part, 875-876, 935-953, 966 part, 967-975, 976 part, 986 part	42.56
College-1	1	Kaliakair_054_00	752-761, 767-792, 796-806, 1222, 1268	16.01
College-2	7	Chandra_154_01	108, 109 part, 110-111, 113-116, 117 part	11.07
High School-1	1	Kaliakair_054_00	793-795, 1225-1227, 1234-1243, 1244 part, 1245 part, 1266-1267	5.28
High School-2	2	Latifpur_353_00	136, 139, 141-142, 144 part, 162 part, 163-165, 167	3.03
High School-3	3	Goalbathan_144_02	750-752, 770-772	5.22

Proposed facilitiles	Ward No.	CS Mouza Name	Plot No.	Area in Acre
High School-4	6	Baro Kalampur_148_02	424 part, 426-427	4.99
High School-5	6	Baro Kalampur_148_02	603 part, 604 part	0.36
	7	Chandra_154_02	520, 521 part, 558 part, 559, 561 part, 562 part, 563-564	5.00
High School-6	7	Chandra_154_01	235-236, 238 part, 240 part, 269 part	4.07
		Chandra_154_03	1357-1370, 1384, 1457, 1458 part	
High School-7	8	Purba Chandra_162_00	25 part, 26, 34, 36 part	4.73
High School-8	8	Purba Chandra_162_00	251 part, 252	3.27
High School-9	9	Safipur_161_01	9 part, 10 part, 47,, 48, 49 part, 50, 51 part, 52 part, 56 part	5.36
Primary School-1	1	Kaliakair_054_00	1513 part, 1516-1521, 1522 part, 1523 part, 1532 part	3.11
Primary School-2	3	Goalbathan_144_02	770 part, 771 part, 777 part, 778, 779 part	1.99
Primary School-3	4	Pachikki_147_00	179 part, 181 part	0.80
Primary School-4	5	Haritakrtala_146_02	232, 233, 234 part, 249 part, 250 part, 340 part, 341	2.02
Primary School-5	5	Dainkini_149_00	65, 87 part	2.11
Primary School-6	6	Baro Kalampur_148_02	482 part, 483, 484 part, 485 part	2.19
Primary School-7	6	Baro Kalampur_148_02	709 part, 710 part, 723 part, 724 part, 725 part, 726 part	2.15
Primary School-8	7	Chandra_154_03	1501 part, 1502-1503, 1506, 1508 part, 1631	2.27
Primary School-9	7	Chandra_154_01	114 part, 183 part, 190 part,	1.93
Primary School-10	9	Safipur_161_02	751-753 part, 756-758, 760-762 part	2.10
Madrasa	6	Baro Kalampur_148_02	376 part, 377 part, 378 part, 382	6.51
Open Space				
Stadium/ Sports Complex	7	Chandra_154_01	114 part, 117 part, 118 part, 119-122, 123 part, 156 part	9.44
Central Park	7	Chandra_154_01	118 part, 141-142, 143 part, 148 part, 149-155	6.52
Cremation	3	Sreefaltali_139_00	696-698	0.43
Community Park-1	3	Sreefaltali_139_00	719 part, 876 part, 903, 971, 972 part, 977 part	1.46
Community Park-2	3	Goalbathan_144_01	383 part, 384-389, 1086	5.11
		Goalbathan_144_02	513 part, 514, 515 part, 516 part	
Community Park-3	9	Safipur_161_02	816 part, 819 part, 841, 856 part, 858-859	2.56
Playground-1	1	Kaliakair_054_00	1494, 1496, 1537-1541, 1542 part, 1543-1544, 1620	7.63
Playground-2	2	Janurchala_051_01	251, 255 part	

Proposed facilitiles	Ward No.	CS Mouza Name	Plot No.	Area in Acre
				1.26
Playground-3	3	Sreefaltali_139_00	518-519, 615-616, 617 part, 619 part, 620 part	2.66
Playground-4	3	Goalbathan_144_02	699, 705 part, 706, 752 part, 753-756, 996-999	3.35
Playground-5	4	Pachikki_147_00	84 part, 211 part, 212 part	1.40
Playground-6	5	Haritakitala_146_02	244 part, 245-247, 249 part, 337 part, 339	1.91
Playground-7	6	Baro Kalampur_148_02	345 part, 355 part, 360 part, 361 part, 362, 363 part	3.40
Playground-8	6	Baro Kalampur_148_02	710 part, 711 part, 712 part	0.80
Playground-9	8	Purbo Chandra_162_00	251 part	2.25
Playground-10	9	Safipur_161_01	11 part, 12 part, 14 part, 15, 49 part	5.38
Utility & Service Facility				
Dumping Site-1	2	Janurchala_051_01	90 part, 91, 92 part, 93-94	4.23
Dumping Site-2	9	Safipur_161_01	16 part, 17, 21 part	3.91
Slutter House-1	1	Shemoiltali_141_02	409	0.49
Slutter House-2	7	Chandra_154_02	2014 part, 2015 part	0.24
Public Toilet-1	1	Shemoiltali_141_04	32 part	0.07
Public Toilet-2	7	Chandra_154_01	104 part	0.15
Waste Transfer Station-1	1	Shemoiltali_141_04	32 part	0.16
Waste Transfer Station-2	6	Baro Kalampur_148_02	345 part, 363 part	0.73
Waste Transfer Station-3	7	Chandra_154_01	94 part, 104 part	0.28
Water Station	3	Goalbathan_144_02	610 part, 619 part	0.29
Helath Facilities				
Hospital Zone-1	3	Goalbathan_144_01	159 part, 164 part, 165 part, 167 part, 171-174, 253-257, 261-269, 272 part, 273, 276 part, 277-283, 284 part, 290, 986-988, 1023-1026, 1045 part	27.62
Hospital Zone-2	7	Chandra_154_01	104 part, 105-107, 109 part, 190 part, 192 part, 193-194	7.99
Hospital Zone-3	7	Chandra_154_04	2492-2493, 2494 part, 2671, 2672 part, 2693 part, 2695-2699, 2706-2710, 2711 part	21.18
Recreational Facilities				
Theater-1	1	Kaliakair_054_00	795 part, 1212 part, 1213 part, 1214-1221, 1223, 1224, 1461 part, 1621	4.05

Proposed facilitiles	Ward No.	CS Mouza Name	Plot No.	Area in Acre
Theater-2	8	Purbo Chandra_162_00	196 part, 207 part, 208 part, 210 part	2.18
Theater-3	9	Safipur_161_01	357-358	0.99
Community Facilities				
Central Mosque & Eidgah	2	Latifpur_353_00	63 part, 66, 69 part, 70 part, 234 part, 238 part, 239-252, 264-266, 267 part, 440-464	15.42
Cremation	3	Sreefaltali_139_00	696-698	0.43
Poura Community Center	3	Goalbathan_144_02	528 part, 529 part, 530 part, 983	1.92
Eidgha-1	3	Goalbathan_144_02	940 part, 941-942, 950-952, 960-965, 1087	9.34
Eidgha-2	9	Safipur_161_02	923 part, 924 part, 931, 934 part	5.00
Graveyard-1	2	Janurchala_051_01	38, 39 part, 48 part, 50-51	2.93
Graveyard-2	2	Goalbathan_144_02	520-524	4.38
Graveyard-3	3	Sreefaltali_139_00	718 part, 719-729, 852-856, 873-875, 876 part	6.13
Graveyard-4	4	Pachlakki_147_00	9 part	2.29
Graveyard-5	6	Baro Kalampur_148_02	616 part, 617-619, 627 part, 628, 629 part, 640 part	1.91
Graveyard-6	7	Chandra_154_04	2694 part	4.21
Graveyard-7	8	Purbo Chandra_162_00	237 part, 251 part	2.00
Graveyard-8	8	Purbo Chandra_162_00	281 part	1.26
Graveyard-9	9	Safipur_161_02	1027 part, 1028-1034, 1036	7.36
Ward Center	1	Shemoiltali_141_04	32 part	0.14
	2	Latifpur_353_00	83 part, 85 part, 86, 88 part	0.42
	3	Goalbathan_144_02	508 part, 509	0.45
	4	Pachlakki_147_00	302 part	0.21
	5	Haritakitala_146_02	158 part, 159 part	0.38
	6	Baor Kalampur_148_02	435 part, 506	0.68
	7	Chandra_154_03	1507 part, 1508 part	0.24
	8	Purabo Chandra_162_00	207 part	0.67
	9	Safipur_161_01	323 part	0.60

ANNEXURE-G

Mouza Schedule of Waterbody

Ward Name	Mouza Name	Plot No.	Area in Acre
Ward No. 01	Kaliakair_054_00 (Part)	1024,1034,998,999,984,1002-1008,1010,1012, 1013,995-997,1000-1001,1009,1014-1023,1035-1037,987-992,994,998,1039,982,9984-986,,967-972,1499,1526,1504,1588-1590,1527-1528,1530-1531,1534,1536,1617-1619,1107,1113,939,938, 950,948,976,980,981,974,1474,940,,930-937,951,-966,949,1102-1103,1106,1114,1085,918,917, 1446,,,1349-1354,1373-1377,1369-1372,1380,1383-1387,1633-1634,903,895-898,908,1622,866, 900,1311,885,835,844-845,881-882,842,840, 830-834,837-839,871-880,884,889,890-891,1207,1274-1277,1279-1283,1287-1294,1296,1315-1317,731,727,736,726-727,730,697-701,704-709,723,742,743,746,851-852,,944,945,978,979983-984,1002-1003,	42.240
	Latifpur_353_00	311	0.014
	Shemoiltali_141_01	1,2,20,24,27,28,30,31,61,75-78,89-104,108-111,114	4.714
	Shemoiltali_141_02	415,201,475-477,481490,492,495-496	8.477
	Shemoiltali_141_03	638-640,646,632,634-636,639,641-642,628-631,637,638,655,601,656	7.177
	Shemoiltali_141_04	8,23	1.742
	Tanglabari_142_00 (Part)	177-179,183-189,31,32,129-132,182,,75,76,78, 85,121,91,95-97,100-104,113-117,120,133-140,148-153,160-161,165-170,181,182	15.054
Ward No. 02	Janurchala_051_01	403-404,337-338,316,1-2,347,357-384,393-395,43, 385,387-392,396,,	12.373
	Janurchala_051_02	641-945,678,681,521,634,637,510-519,614-616, 535-546,548-558,732-734,744,501-509,560-561, 563-566,584-387,590-593,596-602,721,755-757, 763,725-726,765-767,769,777-802,805-807,809-811	66.153
	Latifpur_353_00	136,159-162,165-166,168-175,176,181-184,102,33-34,151,153,82,88-90,92,186-188,192-199,201-204,533,104,105,107,152,37,109,110,113-115,123-137,,39,21-22,25-27,484,205-206,208-220,519-520,526-529,489-490,263,266,267,269,272,273, 276,436,,501-502,510-516,536,395,430,432,537,4-14,434-435,474-480,485-488,492-500,503-509,295-296,300-301,322,349-350,302-304,,316-319,1-3,15, 425,18-20,,16-17,38,271,277-279,286-287,294, 321,323,329-331	76.24
	Pirerteki_052_00	59,63,,21-23,30,49,72-76,85,15-16,30,54,56,	3.64
Ward No. 03	Goalbathan_144_01	53-54,145,299,322,,64-65,136,10-17,24-28,67,,70-72,95-104,352,85-93,106-116,121,125,126,181-183,1057,1058,1083,224-225,238,79,342-343,348,350-351,359,363-366,369,	30.759
	Goalbathan_144_02	834,913,709-711,954-956,947,433,435,525,464-465,413,415,501,410,726,526,503,504,527-528,455,457,401,807,982	15.12
	Sreefaltali_139_00 (Part)	909-910,895-896,698-700,922-926,929,932,933, 936,939-941,943-946,965,625,514-515,617,717, 510-512,660,663,666,966,460,861,859-860,859-870,	22.633

Ward Name	Mouza Name	Plot No.	Area in Acre
		477-480,503-508,954,956-957,799,801-802,804-810,815-824,828,831,841,	
Ward No. 04	Pachlakki_147_00	177-179,204,84,81-83,9	2.441
	Uttar Baktarpur_145_00	19,134	0.302
Ward No. 05	Dainkini_149_00	15-16,22-24,87,,25-28,108,43,134-135,95,66,60,85-86,132,127,74-80,82	13.705
	Haritakitala_146_01	8-9	0.224
	Haritakitala_146_02	325,220,275-276,281,153,198,171,146	2.401
Ward No. 06	Baro Kalampur_148_02	730,693,522-523,408,404,409,345,358,341,349	3.179
Ward No. 07	Chandra_154_01	46,224,223,39,309,34,40,306,258-259,299,24,329,158,12-13	5.129
	Chandra_154_02	855,,859,861,,,948,819,964,821,822,,929,742,691,923,924,743,856,805,792,800,794,723,,787,798,628,759,,627,645-648,763,766-767,623,587,588,592-594,616,630,635,636,641-644,633,567,599,583,634,621,619,582,744-745,755,799,762,764,765,595,596	25.248
	Chandra_154_03	1595,1224-1226,1231,1634-1635,1591-1592,1614,1620,1621,1623,1624,1222,1232,1590,1154,1158,1159,1576,1583,1587,1161-1162,1633,1629,1544,1169-1170,11721636,1512-1513,1517,1521,1307,1440,1510,1525,1114,1120,1122,1179-1182,1184,1380-1382,1347,1334,1101-1102,1104-1105,1350,1331-1332,1479,1483,1484,1474-1478	28.051
	Chandra_154_04	2660,2670,2665-2668,2484,2735,2742-2743,2745,2748,2503,2505,2423,2448,2478-2479,2457,2473,2521-2522,2439,2446,,2408-2409,2413,2410,2395,2444,2830,2391,,2384,2385,2388,2389,,2333,2297,2343,2345,2359,2296,,2013,2015,2179,2184,2185,2187-2088,2193,2831,2287,2283,2289,2291,2292,2093-2095,2115-2116,2129-2130,2271,2268,2229	15.273
Ward No. 08	Purbo Chandra_162_00	264,265,267,268,272,257,258,263,230-233,259,260,251,285,286,316-317,219,242,,244,250,206,300,131,199-202,207,213,197,53,119,44,94,95,165-167,97-98,103,104,108,151,99,101,106,349,,23,27,29,68,172,301,83	23.192
Ward No. 09	Safipur_161_01	354,225-226,208,461-462,444,426,466,405,211-215,219,428-430,431-432,377,251-252,203,205-207,383,174,179,181,110,170,175-178,389,390,89,	10.565
	Safipur_161_02	1156,994,,,989,,995-997,998-999,1035,1037,1038,1059,1060,1061,1064,,1011,1005,1012-1014,1017,870,962,820,779,1073,775,848,723,735-736,746-747,777,1072,614,899-900,744-745,615-616,623,765,605,606,607,611,612,903,906,912,918,924-926,928-930,955	22.693

ANNEXURE-H

List of Photographs